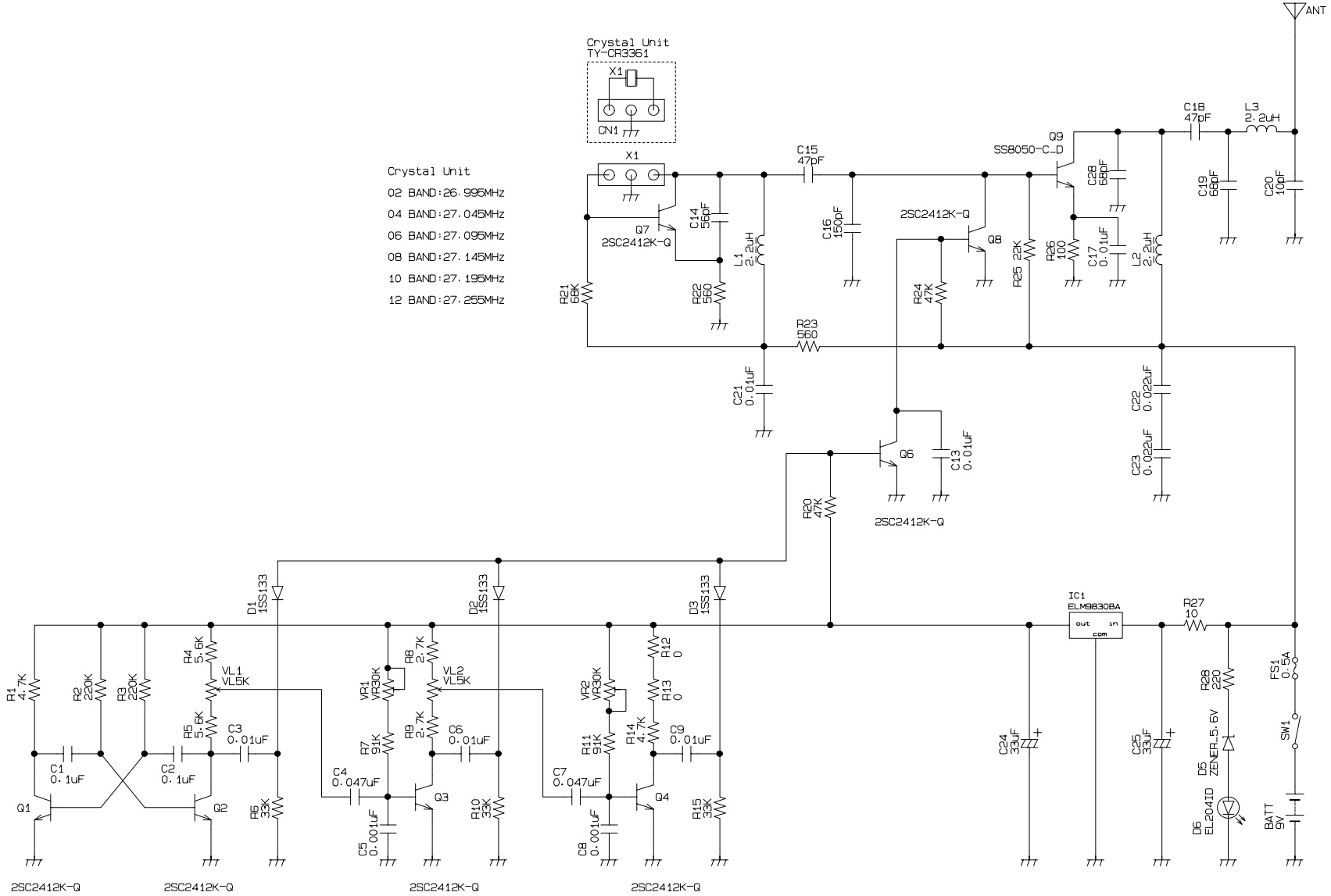

TRANSMITTER	
TY-D1358(A) 27MHz	
Drawing No. T1297	TAIYO KOGYO CO.,LTD