5. Referring to the tables below, set up the radar.

[Radar] menu - [Radar Initial Setup]

Menu item	Description
[Antenna Rotation]	Select the antenna rotation speed.
[Antenna Heading Align]	See "How to align the antenna heading" on page 19.
[Main Bang Suppression]	If main bang appears at the screen center, slide the circle icon so that the main bang disappears, while watching the radar echo at the left-hand side of the display.
[Enable Sector Blanking]	Up to two sectors may be selected for blanking (no transmission). Select [ON] to enable this feature. Set the start and end angles (0° to 359°).
[Enable Sector 2 Blanking]	

[Radar] menu - [Antenna Position]

Menu item	Description
[Longitudinal (from bow)]	Referring to the figure on the right, enter the radar antenna positioning bow-stern (Longitudinal) and port-starboard (Lateral) position from the origin. 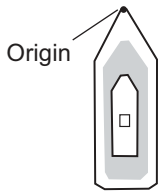
[Lateral (-Port)]	
[Antenna Height]	Select the height of the antenna above the waterline.
[Auto Tuning]	Enable/disable auto tuning for the connected radar.
[Tuning Source]	For dual-range display, select the range to use as the manual tuning source.
[Manual Tuning]	Manually tune the radar. Not available when [Auto Tuning] is enabled.
[Radar Monitoring]	Display various information regarding the connected radar.
[Radar Optimization]	Automatically adjust magnetron output and tuning for the connected radar. **Note:** Be sure to perform [Radar Optimization] after replacing the magnetron.
[ARPA Advanced Settings]	Do not change these settings.
[Set Hardware To Factory Default]	Resets the radar selected at [Radar Source] to factory default.
[Reset Default Settings]	Resets [Radar] menu settings to default.

How to align the antenna heading

You have mounted the antenna unit facing straight ahead in the direction of the bow. Therefore, a small but conspicuous target dead ahead visually should appear on the heading line (zero degrees).

You may observe a minor bearing error on the display. This is due to the difficulty in orienting the radar accurately. The following adjustment will compensate for the error.

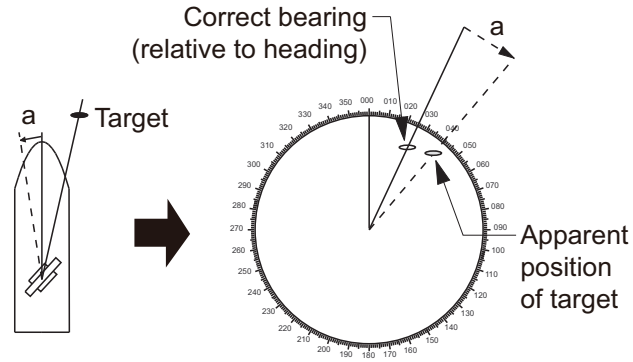

Antenna oriented to port

Picture appears
deviated clockwise.

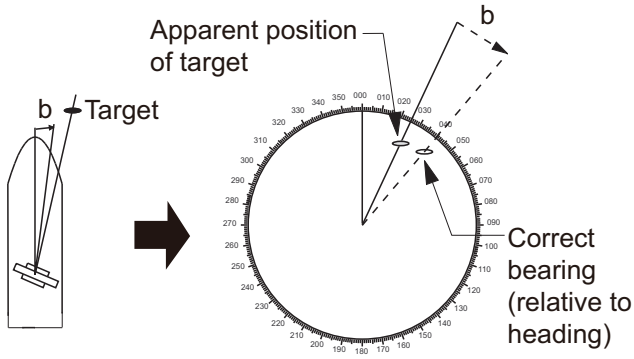

Antenna oriented to starboard

Picture appears
deviated counterclockwise.

1. Set your radar with 0.125 and 0.25 NM range and the head up mode.
   The range scale can be selected two ways, as shown below. The slider bar can be shown or hidden with [Show Scale Slider] in the [Settings] - [Radar] menu.

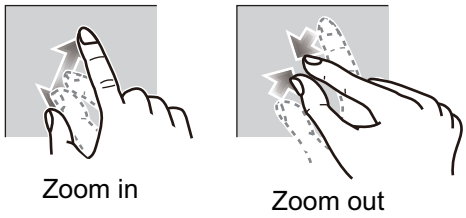

Method 1: Pinch screen

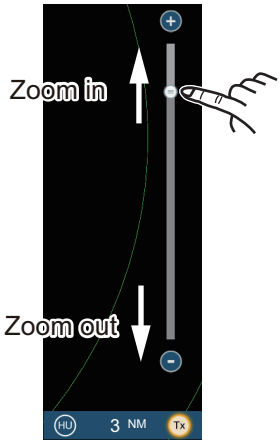

Method 2: Drag slider
(or tap bar or +, - icons)

2. Turn the vessel's bow toward a target.
3. Tap the [Home] icon to show the home screen and display mode settings.
4. Tap [Radar] to show the [Radar] menu.
5. Drag the [Radar] menu to show the [RADAR INITIAL SETUP] menu.
6. Tap [Antenna Heading Align].
7. Key in the offset value so that the target is displayed at the very top of the screen (setting range: +179.9° to -180°, +: clockwise direction, -: counterclockwise direction), then tap the ✓ icon.
8. Confirm that the target echo is displayed at correct bearing on the screen.

3. MAINTENANCE, TROUBLE SHOOTING

Periodic checks and maintenance are important for proper operation of any electronic system. This chapter contains maintenance and troubleshooting instructions to be followed to obtain optimum performance and the longest possible life of the equipment. Before attempting any maintenance or troubleshooting procedure please review the safety information below and at the front of this manual. If you cannot restore normal operation after following the troubleshooting procedures, do not attempt to check inside any unit; there are no user serviceable parts inside. Contact your dealer to check the equipment.

⚠ WARNING

Do not open the equipment.

Hazardous voltage which can cause electrical shock exists inside the equipment. Only qualified personnel should work inside the equipment.

Turn off the antenna unit before servicing the unit. Post a warning sign near the switch indicating it should not be turned on while the antenna unit is being serviced.

Prevent the potential risk of being struck by the rotating antenna.

A transmitting radar antenna emits electromagnetic waves, which can be harmful, particularly the eyes.

Wear a safety belt and hard hat when working on the antenna unit.

Serious injury or death can result if someone falls from the radar antenna mast.

NOTICE

Do not apply paint, anti-corrosive sealant or contact spray to coating or plastic parts of the equipment.

Those items contain organic solvents that can damage coating and plastic parts, especially plastic connectors.

3.1 Maintenance

Regular maintenance is important for good performance. Check the points mentioned below every 3 to 6 months to keep the antenna unit in good working order.

Check point	Action	Remedy, remarks
Check points every 3 to 6 months		
Cable	Check that all cables are firmly connected and are not damaged.	• Connect a cable if it has loosened. • Replace damaged cables.
Exposed bolts and nuts	Check that bolts and nuts are not corroded and are securely fastened.	• Replace corroded bolts. • Tighten loosened bolts. • Coat new bolts with adhesive.
Radiator	Dust, dirt and salt deposits on the radiator cause signal attenuation, resulting in loss of sensitivity.	• Wipe radiator with a freshwater-moistened cloth. • The radiator is made of AES (Acrylonitrile-Ethylene-Styrene) resin. Therefore, do not used gasoline, benzene and the like to clean the radiator. • If the radiator is iced, use a wooden or plastic headed hammer to remove the ice. DO NOT use a steel hammer.
Ground connection	Check for tight connection and rust.	• Fasten if loosened. • Remove rust if present.
Check points every year		
	Check the scanner unit for rust, corrosion and chipped paint.	• If the scanner unit has rusted or the paint has chipped, paint the affected area. • Paint only the scanner unit. Do not paint the antenna (see figure below). Paint on the antenna can cause loss of sensitivity and crack the antenna. 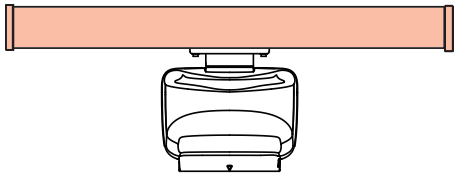 : Do NOT paint. : Painting area

3.2 Troubleshooting

The table below provides simple troubleshooting procedures to restore normal operation. If you cannot restore normal operation, contact your dealer for advice.

Problem	Remedy
The multi function display cannot control the radar.	• Check that all cables are tightly fastened. • Check if the radar source setting is correct. • Check if the fuse of the cable assembly has blown. • Check that the power supply is compatible with the voltage rating of the antenna unit (24 VDC).
Marks and characters appear, but echoes do not appear.	• Check that the antenna cable is tightly fastened. • Check the cables for damage.
Picture is not updated or the picture freezes.	• Check that all cables are tightly fastened. • Check the cables for damage. • If the picture has frozen, reboot the multi function display.
You tuned the receiver or increased the gain, but radar echoes are too week.	• The magnetron may required replacement. Contact your dealer.
You changed the range, but the radar picture does not change.	• Try to change the range again. • Reboot the multi function display.
Poor discrimination in range.	• Adjust the sea control.
Range rings are not displayed.	• Check if the range rings is turned on in the menu.
You set the radar in the transmit state. The "TX screen" appears momentarily, but the radar soon goes into stand-by.	• The overload protection has activated. To restore normal operation, turn off all equipment in the network. Wait a few seconds then turn on all the equipment.

3.3 Replacement of Fuse

The fuse protects the antenna unit from overcurrent and equipment fault. If you cannot turn on the power, check the fuse to see if it has blown. If the fuse has blown, find the reason before you replace the fuse. If the fuse blows again after the replacement, contact your dealer.

Name	Type	Code No.	Remarks
Fuse	FRU-2P5S-FU-5A-B	000-168-869-10	5 A fuse For DRS6A X-Class
	ATV10A60V	000-192-660-10	10 A fuse For DRS12A/25A X-Class

⚠ WARNING

Use the proper fuse.

Use of a wrong fuse can cause fire or damage the equipment.

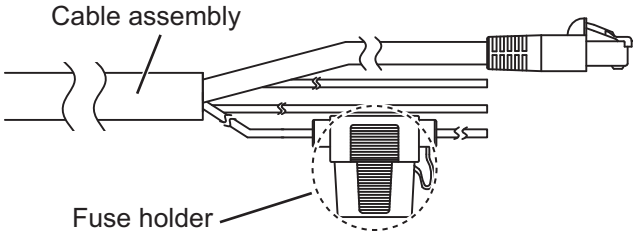

How to replace the fuse

Open the fuse holder cover and replace the fuse. Then close the cover.

3.4 Life of Parts

Magnetron

When a magnetron reaches the end of its life, target echoes become weak and do not appear on the display. If long-range performance appears to have declined, contact your dealer about replacement of the magnetron.

Name	Type	Code No.	Approx. Life	Remarks
Magnetron	MAF1422B	000-158-788-12	5,000 hours	For DRS6A X-Class
	MAF1562R	000-199-827-10	5,000 hours	
	FNE1201	001-245-890	5,000 hours	For DRS12A X-Class
	MG5436	000-140-762-13	5,000 hours	For DRS25A X-Class

Antenna Motor

When an antenna motor reaches the end of its life, the antenna's rotation may stop or abnormal noise sounds from the antenna unit. If such symptom occurs, contact your dealer about replacement of the antenna motor.

Name	Type	Code No.	Approx. Life
Antenna Motor	RSB-134 MOTOR	001-436-400	10,000 hours

APPX. 1 RADIO REGULATORY INFORMATION

USA-Federal Communications Commission (FCC)

This device complies with part 15 of the FCC Rules. Operation is subject to the following two conditions:
(1) This device may not cause harmful interference, and
(2) This device must accept any interference received, including interference that may cause undesired operation. Any changes or modifications not expressly approved by the party responsible for compliance could void the user's authority to operate the equipment.

Caution: Exposure to Radio Frequency Radiation

- This equipment complies with FCC radiation exposure limits set forth for an uncontrolled environment and meets the FCC radio frequency (RF) Exposure Guidelines in Supplement C to OET65.
- This equipment should be installed and operated keeping the radiator away from a person's body at the minimum distances shown in the table below.

Antenna Model	Transceiver Unit	Safety Distance
DRS6A X-Class	RTR-112	300 cm
	RTR-112A	245 cm
DRS12A X-Class	RTR-113	310 cm
DRS25A X-Class	RTR-114	770 cm

- This device must not be co-located or operating in conjunction with any other antenna or transmitter.

Canada-Industry Canada (IC)

This device complies with Industry Canada licence-exempt RSS standard(s). Operation is subject to the following two conditions:
(1) This device may not cause interference, and
(2) This device must accept any interference, including interference that may cause undesired operation of this device.

Le présent appareil est conforme aux CNR d'Industrie Canada applicables aux appareils radio exempts de licence. L'exploitation est autorisée aux deux conditions suivantes:
(1) l'appareil ne doit pas produire de brouillage, et
(2) l'utilisateur de l'appareil doit accepter tout brouillage radioélectrique subi, même si le brouillage est susceptible d'en compromettre le fonctionnement.

Caution: Exposure to Radio Frequency Radiation

This equipment complies with IC radiation exposure limits set forth for an uncontrolled environment and meets RSS-102 of the IC radio frequency (RF) Exposure rules. This equipment should be installed and operated keeping the radiator away from a person's body at the minimum distances shown in the table below.

Antenna Model	Transceiver Unit	Safety Distance
DRS6A X-Class	RTR-112	300 cm
	RTR-112A	245 cm
DRS12A X-Class	RTR-113	310 cm
DRS25A X-Class	RTR-114	770 cm

Cet équipement est conforme aux limites d'exposition aux rayonnements énoncées pour un environnement non contr êolé et respecte les règles d'exposition aux fréquences radioélectriques (RF) CNR-102 de l'IC. Cet équipement doit etre installé et utilise en gardant une distance de 245 cm (DRS6A X-Class (RTR-112A)), 300 cm (DRS6A X-Class (RTR-112)), 310 cm (DRS12A X-Class (RTR-113)), 770 cm (DRS25A X-Class (RTR-114)) ou plus entre le dispositif rayonnant et le corps.

To reduce potential radio interference to other users, the antenna type and its gain should be so chosen that the equivalent isotropically radiated power (EIRP) is not more than that required for successful communication.

SPECIFICATIONS OF RADAR SENSOR
DRS6A/12A/25A X-Class

1 ANTENNA UNIT

1.1	Antenna type	Slotted waveguide array
1.2	Antenna length	3.4 ft (XN10A), 4 ft (XN12A), 6 ft (XN13A) Radiator type XN10A for DRS6A X-Class only
1.3	Horizontal beam width	2.3° (XN10A), 1.9° (XN12A), 1.35° (XN13A)
1.4	Vertical beam width	22°
1.5	Antenna gain	27.5 dBi (XN10A), 28.0 dBi (XN12A), 29.5 dBi (XN13A)
1.6	Polarization	Horizontal
1.7	Rotation	24/36/48 rpm range coupled or 24 rpm fixed
1.8	Relative wind load	70 kn or less

2 RADAR FUNCTION

2.1	Tx frequency	9410 ±30 MHz
2.2	Output power	
	DRS6A X-Class	6 kW nominal
	DRS12A X-Class	12 kW nominal
	DRS25A X-Class	25 kW nominal
2.3	Duplexer	Ferrite circulator with diode limiter
2.4	Intermediate frequency	60 MHz

2.5 Range, Pulse length and Pulse Repetition Rate (PRR)

Range (NM)	Pulse length (μs)	PRR (Hz. approx.)
0.125 to 0.75	0.08	3000
1 to 1.5	0.15	1500
2	0.3	1000
3 to 4	0.5	600
6 to 8	0.8	600
12 to 64	1.2	600
72 to 96	1.2	550

2.6	Minimum range	25 m
2.7	Range resolution	20 m
2.8	Range accuracy	Within 1% of range in use
2.9	Bearing resolution	2.3 (XN10A), 1.9° (XN12A), 1.4° (XN13A)
2.10	Bearing accuracy	Within ±1°
2.11	Pre-heating time	90 s approx.
2.12	Target tracking (TT)	Auto or manual acquisition: 100 targets between 0.1 NM and 16 NM Past position: 5/10 pts on all activated targets Vector time: 1 to 60 min.

3 INTERFACE

LAN	1 port, Ethernet, 100Base-TX, RJ45

4 POWER SUPPLY

DRS6A X-Class	24 VDC (21.6-31.2 VDC): 4.0 A (stand-by: 0.8 A)
DRS12A X-Class	24 VDC (21.6-31.2 VDC): 4.5 A (stand-by: 1.0 A)
DRS25A X-Class	24 VDC (21.6-31.2 VDC): 5.6 A (stand-by: 1.0 A)

5 ENVIRONMENTAL CONDITIONS

5.1	Ambient temperature	-25°C to +55°C (storage: -30°C to +70°C)
5.2	Relative humidity	95% or less at +40°C
5.3	Degree of protection	IP56
5.4	Vibration	IEC 60945 Ed.4

6 UNIT COLOR

N9.5

PACKING LIST

03HS-X-9851 -3 1/1

RSB-134-112-E

A-1

NAME	OUTLINE	DESCRIPTION/CODE No.	Q'TY
ユニット UNIT			
空中線本体部 SCANNER UNIT	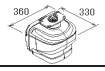	RSB-134-112 000-029-256-00	1
予備品 SPARE PARTS			
予備品 SPARE PARTS		SP03-19401 001-513-730-00	1
工事材料 INSTALLATION MATERIALS			
工事材料 INSTALLATION MATERIALS		CP03-37101 001-426-290-00	1
図書 DOCUMENT			
ﾚｰﾀﾞｰｾﾝｻｰ型紙 RADAR SENSOR TEMPLATE	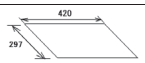	C32-02103-* 000-198-927-1*	1
装備要領書 INSTALLATION MANUAL	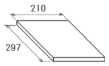	IME-36460-* 000-191-085-1*	1

（略図の寸法は、参考値です。 DIMENSIONS IN DRAWING FOR REFERENCE ONLY.）

C3646-Z01-D

PACKING LIST

03HW-X-9851 -2 1/1

RSB-134-113-E

A-2

NAME	OUTLINE	DESCRIPTION/CODE No.	Q'TY
ユニット UNIT			
空中線本体部 SCANNER UNIT	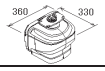	RSB-134-113 000-030-454-00	1
予備品 SPARE PARTS			
予備品 SPARE PARTS		SP03-19601 001-514-020-00	1
工事材料 INSTALLATION MATERIALS			
工事材料 INSTALLATION MATERIALS		CP03-37101 001-426-290-00	1
図書 DOCUMENT			
ﾚｰﾀﾞｰｾﾝｻｰ型紙 RADAR SENSOR TEMPLATE	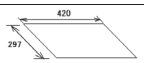	C32-02103-* 000-198-927-1*	1
装備要領書 INSTALLATION MANUAL	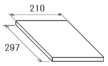	IME-36460-* 000-191-085-1*	1

（略図の寸法は、参考値です。 DIMENSIONS IN DRAWING FOR REFERENCE ONLY.）

C3647-Z01-C

PACKING LIST

03HX-X-9851 -2 1/1

RSB-134-114-E

A-3

NAME	OUTLINE	DESCRIPTION/CODE No.	Q'TY
ユニット UNIT			
空中線本体部 SCANNER UNIT	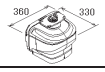	RSB-134-114 000-030-486-00	1
予備品 SPARE PARTS			
予備品 SPARE PARTS		SP03-19601 001-514-020-00	1
工事材料 INSTALLATION MATERIALS			
工事材料 INSTALLATION MATERIALS		CP03-37101 001-426-290-00	1
図書 DOCUMENT			
ﾚｰﾀﾞｰｾﾝｻｰ型紙 RADAR SENSOR TEMPLATE	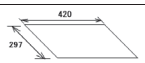	C32-02103-* 000-198-927-1*	1
装備要領書 INSTALLATION MANUAL	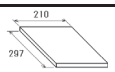	IME-36460-* 000-191-085-1*	1

（略図の寸法は、参考値です。 DIMENSIONS IN DRAWING FOR REFERENCE ONLY.）

C3648-Z01-C

PACKING LIST

19AK-X-9856 -7 1/1

XN10A, XN12A, XN13A, XN12A-N-CKD, XN13A-N-CKD

A-4

NAME	OUTLINE	DESCRIPTION/CODE No.	Q'TY
ユニット UNIT			
ｱﾝﾃﾅ ANTENNA	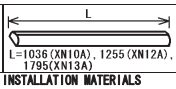 L=1036(XN10A), 1255(XN12A), 1795(XN13A)	XN10A/12A/13A 008-390-960-00 **	1
ｱﾝﾃﾅ工材 ANTENNA INSTALLATION MATERIALS			
工事材料 INSTALLATION MATERIALS		CP03-22901 008-523-690-00	1

ｺｰﾄﾞ番号末尾の[**]は、選択品の代表ｺｰﾄﾞを表します。
CODE NUMBER ENDING WITH "**" INDICATES THE CODE NUMBER OF REPRESENTATIVE MATERIAL.

型式/ｺｰﾄﾞ番号が2段の場合、下段より上段に代わる過渡期品であり、どちらかが入っています。 なお、品質は変わりません。

TWO TYPES AND CODES MAY BE LISTED FOR AN ITEM. THE LOWER PRODUCT MAY BE SHIPPED IN PLACE OF THE UPPER PRODUCT. QUALITY IS THE SAME.

（略図の寸法は、参考値です。 DIMENSIONS IN DRAWING FOR REFERENCE ONLY.）

C3500-Z01-G

FURUNO

CODE NO.	001-426-290-00	03HS-X-9401 -1
TYPE	CP03-37101	1/1

工事材料表

INSTALLATION MATERIALS

番号 NO.	名称 NAME	略図 OUTLINE	型名／規格 DESCRIPTIONS		数量 Q'TY	用途／備考 REMARKS
1	絶縁シート1 INSULATION SHEET 1	Φ48	03-182-3117-2	CODE NO. 100-387-752-10	4	
2	六角ﾅｯﾄ ﾄｼｭ HEXAGONAL NUT	10 19	M12 SUS304	CODE NO. 000-167-491-10	8	
3	ﾊﾞﾈ座金 SPRING WASHER	22	M12 SUS304	CODE NO. 000-167-397-10	4	
4	平座金 FLAT WASHER	φ24	M12 SUS316L	CODE NO. 000-167-417-10	4	
5	六角穴付止めﾈｼﾞ HEXAGON SOCKET SET SCREW	70 Φ12	M12X70 SUS304	CODE NO. 000-191-051-10	4	

(略図の寸法は、参考値です。 DIMENSIONS IN DRAWING FOR REFERENCE ONLY.)

FURUNO ELECTRIC CO., LTD.

C3646-M01-B

FURUNO

CODE NO.	008-523-690-00	19AK-X-9405 -5
TYPE	CP03-22901	1/1

工事材料表

INSTALLATION MATERIALS

番号 NO.	名称 NAME	略図 OUTLINE	型名／規格 DESCRIPTIONS		数量 Q'TY	用途／備考 REMARKS
1	ﾊﾞﾈ座金 SPRING WASHER	15	M8 SUS304	CODE NO. 000-167-410-10	4	
2	ﾐｶﾞｷ丸平座金 FLAT WASHER	φ17	M8 SUS304	CODE NO. 000-167-464-10	4	
3	六角ｽﾘﾜﾘ ﾎﾞﾙﾄ HEXAGONAL HEAD SLOTTED BOLT	30 φ8	M8X30 SUS304	CODE NO. 000-162-922-10	4	
4	ｏﾘﾝｸﾞ(DIASEAL) O-RING(DIASEAL)	φ80	OR NBR-70-1 G80-N	CODE NO. 000-171-787-10	1	
5	接着剤袋詰 ADHESIVE	164 35 28	TB5211 50G	CODE NO. 001-477-870-00	1	

(略図の寸法は、参考値です。 DIMENSIONS IN DRAWING FOR REFERENCE ONLY.)

FURUNO ELECTRIC CO., LTD.

C3500-M02-F

FURUNO

CODE NO.		03HP-X-9401 -0
TYPE		1/1

工事材料表

INSTALLATION MATERIALS

番号 NO.	名称 NAME	略図 OUTLINE	型名／規格 DESCRIPTIONS		数量 Q'TY	用途／備考 REMARKS
1	ｹｰﾌﾞﾙ(組品) CABLE ASSEMBLY	L=10M	FRU-2P5S-FF-10M	CODE NO. 001-376-460-00	1	選択 TO BE SELECTED
2	ｹｰﾌﾞﾙ(組品) CABLE ASSEMBLY	L=15M	FRU-2P5S-FF-15M	CODE NO. 001-376-480-00	1	選択 TO BE SELECTED
3	ｹｰﾌﾞﾙ(組品) CABLE ASSEMBLY	L=20M	FRU-2P5S-FF-20M	CODE NO. 001-376-490-00	1	選択 TO BE SELECTED
4	ｹｰﾌﾞﾙ(組品) CABLE ASSEMBLY	L=30M	FRU-2P5S-FF-30M	CODE NO. 001-376-500-00	1	選択 TO BE SELECTED

(略図の寸法は、参考値です。 DIMENSIONS IN DRAWING FOR REFERENCE ONLY.)

FURUNO ELECTRIC CO., LTD.

C3637-M02-A

FURUNO

CODE NO.	001-426-190-00	03HR-X-9301 -0 1/1
TYPE	SP03-18101	BOX NO. P

SHIP NO.	SPARE PARTS LIST FOR	U S E	SETS PER VESSEL

ITEM NO.	NAME OF PART	OUTLINE	DWG. NO. OR TYPE NO.	QUANTITY WORKING PER SET	QUANTITY WORKING PER VES	QUANTITY SPARE	REMARKS/CODE NO.
1	ﾋｭｰｽﾞ FUSE	19 5 20	FRU-2P5S-FU-5A-B	1		1	000-168-869-10

MFR'S NAME	FURUNO ELECTRIC CO.,LTD.	DWG NO.	C3646-P01-A	1/1

(略図の寸法は、参考値です。 DIMENSIONS IN DRAWING FOR REFERENCE ONLY.)

FURUNO

CODE NO.	001-458-590-00	03HW-X-9301-0 1/1	
TYPE	SP03-18301	BOX NO. P	

SHIP NO.	SPARE PARTS LIST FOR	U S E	SETS PER VESSEL

ITEM NO.	NAME OF PART	OUTLINE	DWG. NO. OR TYPE NO.	QUANTITY WORKING PER SET	QUANTITY WORKING PER VES	QUANTITY SPARE	REMARKS/CODE NO.
1	ﾋｭｰｽﾞ BLADE FUSE		ATV10A60V	1		1	000-192-660-10

MFR'S NAME	FURUNO ELECTRIC CO.,LTD.	DWG NO.	C3647-P01-A	1/1

(略図の寸法は、参考値です。 DIMENSIONS IN DRAWING FOR REFERENCE ONLY.)

FURUNO

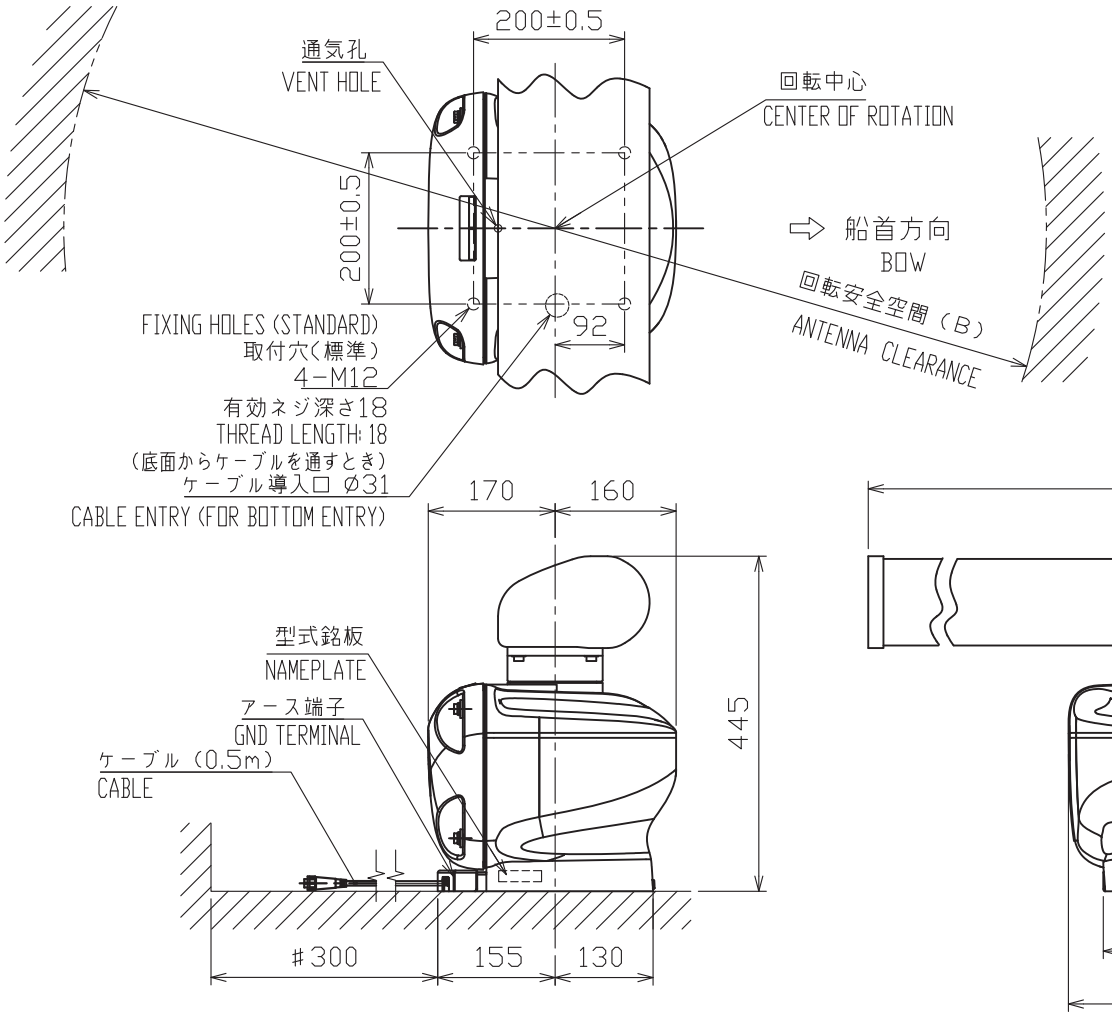

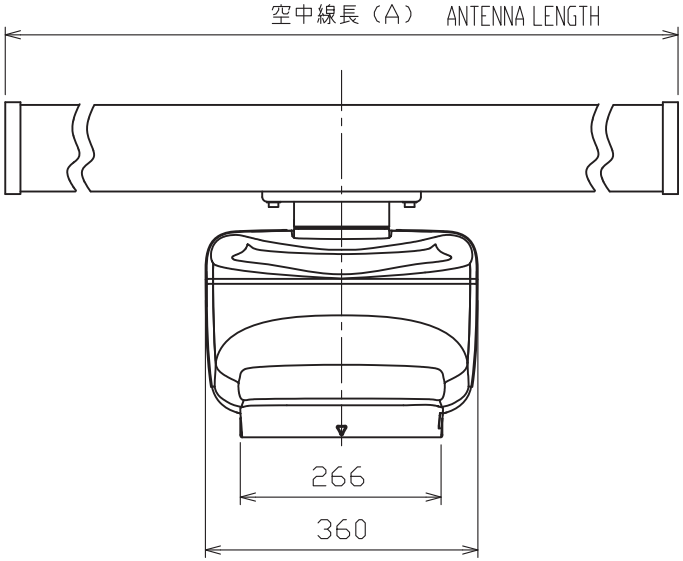

表2 TABLE 2

機種型式 MODEL	DRS6A X-Class		
		DRS12A X-Class	
輻射器 RADIATOR	XN10A ※	XN12A	XN13A
空中線長 (A) ANTENNA LENGTH (mm)	1036±10	1255±10	1795±10
回転安全空間 (B) ANT. CLEARANCE (mm)	1200	1400	1940
質量 (kg±10%) MASS	20	21	23

※：海外向けのみ

表1 TABLE 1

寸法区分 (mm) DIMENSION	公差 (mm) TOLERANCE
L≦50	±1.5
50<L≦100	±2.5
100<L≦500	±3
500<L≦1000	±4
1000<L≦2000	±5

注記
1）指定なき寸法公差は表1による。
2）#印寸法は最小サービス空間寸法とする。
3）取付はM12のスタッドボルトにて行うこと。
4）通気孔はふさがないこと。

NOTE
1. TABLE 1 INDICATES TOLERANCE OF DIMENSIONS WHICH IS NOT SPECIFIED.
2. #: MINIMUM SERVICE CLEARANCE.
3. USE M12 BOLTS FOR FIXING THE UNIT.
4. DO NOT COVER THE VENT HOLE.

DRAWN 31/Jul/2020 T.YAMASAKI		TITLE	RSB-134
CHECKED 31/Jul/2020 H.MAKI		名称	空中線部
APPROVED 3/Aug/2020 H.MAKI	DRS12A X-Class DRS6A X-Class		外寸図
SCALE 1/10 MASS 表2参照 SEE TABLE 2		NAME	ANTENNA UNIT
DWG.No. C3646-G01-E	REF.No. 03-189-300G-3		OUTLINE DRAWING

FURUNO ELECTRIC CO., LTD.

FURUNO

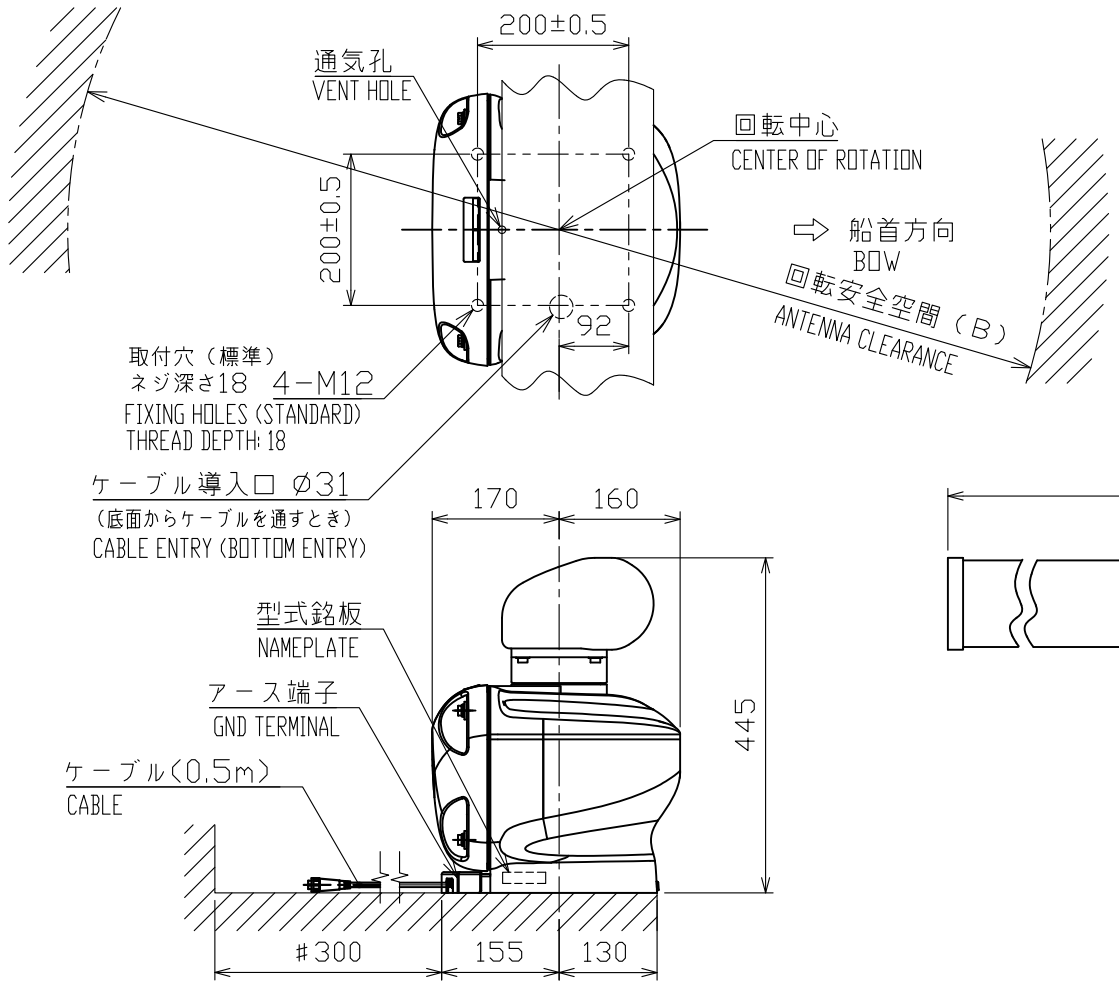

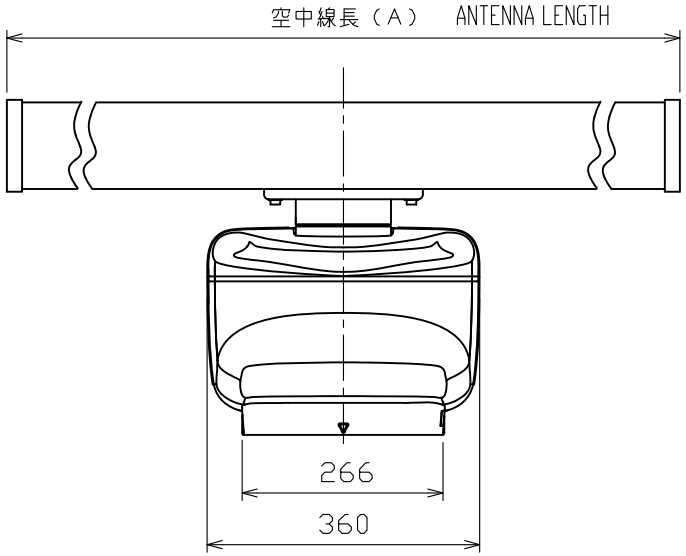

表 2　TABLE 2

輻射器 RADIATOR	XN12A	XN13A
空中線長（A） ANTENNA LENGTH(mm)	1255±10	1795±10
回転安全空間（B） ANTENNA CLEARANCE(mm)	1400	1940
質量(kg±10%) MASS	22	24

表 1　TABLE 1

寸法区分（mm） DIMENSION	公差（mm） TOLERANCE
L≦50	±1.5
50<L≦100	±2.5
100<L≦500	±3
500<L≦1000	±4
1000<L≦2000	±5

注 記　1）指定なき寸法公差は表１による。
　　2）＃印寸法は最小サービス空間寸法とする。
　　3）取付はＭ１２ボルトを使用のこと。
　　4）通気孔は塞がないこと。

NOTE
1. TABLE 1 INDICATES TOLERANCE OF DIMENSIONS WHICH IS NOT SPWCIFIED.
2. #: MINIMUM SERVICE CLEARANCE.
3. USE M12 BOLTS FOR FIXING THE UNIT.
4. DO NOT COVER THE VENT HOLE.

DRAWN 4/Feb/2021 T.YAMASAKI		TITLE	RSB-134
CHECKED 4/Feb/2021 H.MAKI		名称	空中線部
APPROVED 4/Feb/2021 H.MAKI	DRS25A X-Class		外寸図
SCALE 1/10	MASS 表2参照 SEE TABLE 2	NAME	ANTENNA UNIT
DWG.No. C3648-G01- B	REF.No. 03-189-320G-2		OUTLINE DRAWING

D-2

（1） 取付ボルトのダブルナット締付手順
PROCEDURE OF DOUBLE NUTS FASTENING TO A BOLT

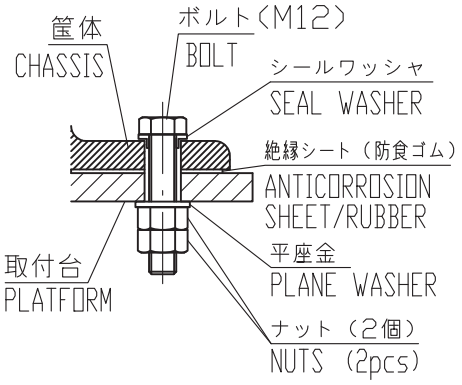

締付方法 FASTENING METHOD

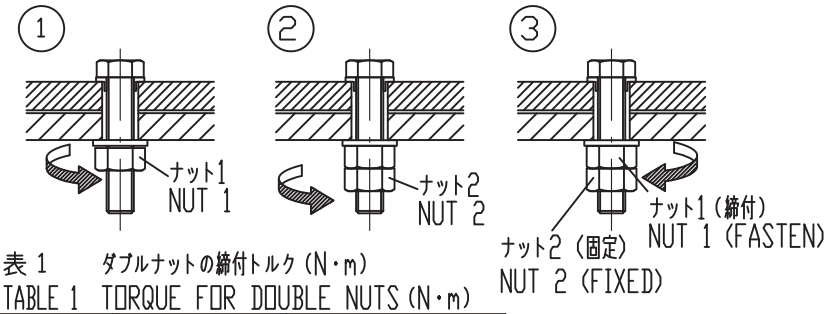

表 1 ダブルナットの締付トルク（N・m）
TABLE 1 TORQUE FOR DOUBLE NUTS (N・m)

空中線部 ANT. UNIT		標準 STANDARD	RSB-098/099/100/101/102/132/144
ナット NUT	1	57	74
	2	49	63.5

ナット1とナット2は、右図の通り同時に締め付けます。このとき、どちらのナットにも200mm程度のスパナを使用してください。

FASTEN THE DOUBLE NUTS AS SHOWN IN THE FIGURE TO THE RIGHT. USE SPANNERS WITH A LENGTH OF APPROX. 200 mm.

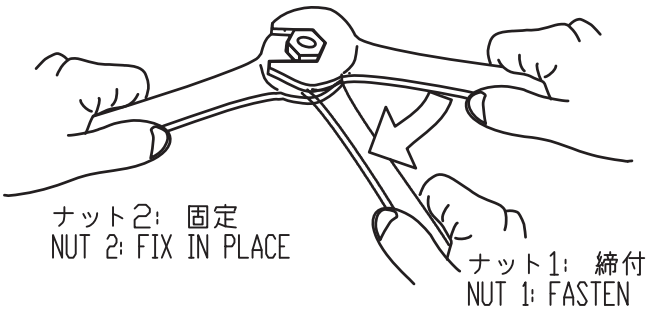

（2） 防水シールの例
EXAMPLE FOR SEALING BOLTS/NUTS

注記
1） 取付ボルト、ナットには、図示（２）のようにシール剤を塗布すること。
2） 空中線部本体は、底面に外部との圧力調整機能がありますので、装備面の周囲にはシリコンを塗布しないでください。

NOTE
1. APPLY SILICONE SEALANT ONTO FIXING BOLT/NUT AS FIGURE (2).
2. DO NOT APPLY SILICONE SEALANT AROUND THE ANTENNA BASE BECAUSE IT HAS A FUNCTION FOR PRESSURE BALANCE WITH OUTER ENVIRONMENT.

DRAWN 25/Mar/2021 T.YAMASAKI			TITLE RADAR OPEN ANTENNA
CHECKED 25/Mar/2021 H.MAKI			名称 レーダーオープンアンテナ（締付トルク）
APPROVED 25/Mar/2021 H.MAKI			装備要領図
SCALE –	MASS – ±10% kg		NAME TORQUE FOR FASTENING
DWG. No. C3900-Y01- A	REF. No.		INSTALLATION PROCEDURE

FURUNO

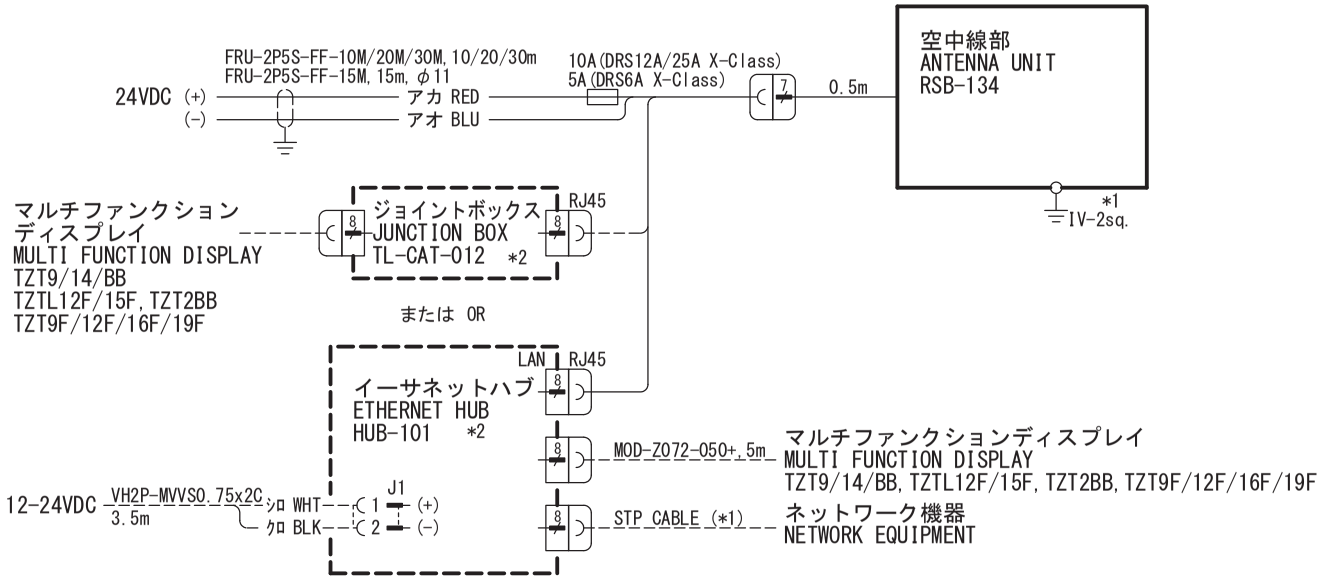

注記
＊１）造船所手配。
＊２）オプション。

NOTE
*1: SHIPYARD SUPPLY.
*2: OPTION.

DRAWN 6/Jan/2021 T. YAMASAKI			TITLE DRS6A/12A/25A X-Class
CHECKED 6/Jan/2021 H. MAKI			名 称 レーダーセンサー
APPROVED 8/Jan/2021 H.MAKI			相互結線図
SCALE	MASS kg		NAME RADAR SENSOR
DWG. No. C3646-C01- C	REF. No. 03-189-6011-3		INTERCONNECTION DIAGRAM

S-1

FURUNO ELECTRIC CO., LTD.

FURUNO Worldwide Warranty for Pleasure Boats (Except North America)

This warranty is valid for products manufactured by Furuno Electric Co. (hereafter FURUNO) and installed on a pleasure boat. Any web based purchases that are imported into other countries by anyone other than a FURUNO certified dealer may not comply with local standards. FURUNO strongly recommends against importing these products from international websites as the imported product may not work correctly and may interfere with other electronic devices. The imported product may also be in breach of the local laws and mandated technical requirements. Products imported into other countries as described previously shall not be eligible for local warranty service.

For products purchased outside of your country please contact the national distributor of Furuno products in the country where purchased.

This warranty is in addition to the customer´s statutory legal rights.

1. Terms and Conditions of Warranty

FURUNO guarantees that each new FURUNO product is the result of quality materials and workmanship. The warranty is valid for a period of 2 years (24 months) from the date of the invoice, or the date of commissioning of the product by the installing certified dealer.

2. FURUNO Standard Warranty

The FURUNO standard warranty covers spare parts and labour costs associated with a warranty claim, provided that the product is returned to a FURUNO national distributor by prepaid carrier.

The FURUNO standard warranty includes:

- Repair at a FURUNO national distributor
- All spare parts for the repair
- Cost for economical shipment to customer

3. FURUNO Onboard Warranty

If the product was installed/commissioned and registered by a certified FURUNO dealer, the customer has the right to the onboard warranty.

The FURUNO onboard warranty includes

- Free shipping of the necessary parts
- Labour: Normal working hours only
- Travel time: Up to a maximum of two (2) hours
- Travel distance: Up to a maximum of one hundred and sixty (160) KM by car for the complete journey

4. Warranty Registration

For the Standard Warranty - presentation of product with serial number (8 digits serial number, 1234-5678) is sufficient. Otherwise, the invoice with serial number, name and stamp of the dealer and date of purchase is shown.

For the Onboard Warranty your FURUNO certified dealer will take care of all registrations.

5. Warranty Claims

For the Standard Warranty - simply send the defective product together with the invoice to a FURUNO national distributor.
For the Onboard Warranty – contact a FURUNO national distributor or a certified dealer. Give the product´s serial number and describe the problem as accurately as possible.

Warranty repairs carried out by companies/persons other than a FURUNO national distributor or a certified dealer is not covered by this warranty.

6. Warranty Limitations

When a claim is made, FURUNO has a right to choose whether to repair the product or replace it.

The FURUNO warranty is only valid if the product was correctly installed and used. Therefore, it is necessary for the customer to comply with the instructions in the handbook. Problems which result from not complying with the instruction manual are not covered by the warranty.

FURUNO is not liable for any damage caused to the vessel by using a FURUNO product.

The following are excluded from this warranty:

a. Second-hand product

b. Underwater unit such as transducer and hull unit

c. Routine maintenance, alignment and calibration services.

d. Replacement of consumable parts such as fuses, lamps, recording papers, drive belts, cables, protective covers and batteries.

e. Magnetron and MIC with more than 1000 transmitting hours or older than 12 months, whichever comes first.

f. Costs associated with the replacement of a transducer (e.g. Crane, docking or diver etc.).

g. Sea trial, test and evaluation or other demonstrations.

h. Products repaired or altered by anyone other than the FURUNO national distributor or an authorized dealer.

i. Products on which the serial number is altered, defaced or removed.

j. Problems resulting from an accident, negligence, misuse, improper installation, vandalism or water penetration.

k. Damage resulting from a force majeure or other natural catastrophe or calamity.

l. Damage from shipping or transit.

m. Software updates, except when deemed necessary and warrantable by FURUNO.

n. Overtime, extra labour outside of normal hours such as weekend/holiday, and travel costs above the 160 KM allowance

o. Operator familiarization and orientation.

FURUNO Electric Company, March 1, 2011

FURUNO Warranty for North America

FURUNO U.S.A., Limited Warranty provides a twenty-four (24) months LABOR and twenty-four (24) months PARTS warranty on products from the date of installation or purchase by the original owner. Products or components that are represented as being waterproof are guaranteed to be waterproof only for, and within the limits, of the warranty period stated above. The warranty start date may not exceed eighteen (18) months from the original date of purchase by dealer from Furuno USA and applies to new equipment installed and operated in accordance with Furuno USA's published instructions.

Magnetrons and Microwave devices will be warranted for a period of 12 months from date of original equipment installation.

Furuno U.S.A., Inc. warrants each new product to be of sound material and workmanship and through its authorized dealer will exchange any parts proven to be defective in material or workmanship under normal use at no charge for a period of 24 months from the date of installation or purchase.

Furuno U.S.A., Inc., through an authorized Furuno dealer will provide labor at no cost to replace defective parts, exclusive of routine maintenance or normal adjustments, for a period of 24 months from installation date provided the work is done by Furuno U.S.A., Inc. or an AUTHORIZED Furuno dealer during normal shop hours and within a radius of 50 miles of the shop location.

A suitable proof of purchase showing date of purchase, or installation certification must be available to Furuno U.S.A., Inc., or its authorized dealer at the time of request for warranty service.

This warranty is valid for installation of products manufactured by Furuno Electric Co. (hereafter FURUNO). Any purchases from brick and mortar or web-based resellers that are imported into other countries by anyone other than a FURUNO certified dealer, agent or subsidiary may not comply with local standards. FURUNO strongly recommends against importing these products from international websites or other resellers, as the imported product may not work correctly and may interfere with other electronic devices. The imported product may also be in breach of the local laws and mandated technical requirements. Products imported into other countries, as described previously, shall not be eligible for local warranty service.

For products purchased outside of your country please contact the national distributor of Furuno products in the country where purchased.

WARRANTY REGISTRATION AND INFORMATION

To register your product for warranty, as well as see the complete warranty guidelines and limitations, please visit www.furunousa.com and click on "Support". In order to expedite repairs, warranty service on Furuno equipment is provided through its authorized dealer network. If this is not possible or practical, please contact Furuno U.S.A., Inc. to arrange warranty service.

FURUNO U.S.A., INC.
Attention: Service Coordinator
4400 N.W. Pacific Rim Boulevard
Camas, WA 98607-9408
Telephone: (360) 834-9300
FAX: (360) 834-9400

Furuno U.S.A., Inc. is proud to supply you with the highest quality in Marine Electronics. We know you had several choices when making your selection of equipment, and from everyone at Furuno we thank you. Furuno takes great pride in customer service.

Declaration of Conformity
[DRS6A X-Class/DRS12A X-Class/DRS25A X-Class]

Bulgarian (BG)	С настоящото Furuno Electric Co., Ltd. декларира, че гореспоменат тип радиосъоръжение е в съответствие с Директива 2014/53/EC, SI 2017/1206. Цялостният текст на EC/UK декларацията за съответствие може да се намери на следния интернет адрес:
Spanish (ES)	Por la presente, Furuno Electric Co., Ltd. declara que el tipo de equipo radioeléctrico arriba mencionado es conforme con la Directiva 2014/53/UE, SI 2017/1206. El texto completo de la declaración de conformidad de la EU/UK está disponible en la siguiente dirección Internet:
Czech (CS)	Tímto Furuno Electric Co., Ltd. prohlašuje, že výše zmíněné typ rádiového zařízení je v souladu se směrnicí 2014/53/EU, SI 2017/1206. Úplné znění EU/SK prohlášení o shodě je k dispozici na této internetové adrese:
Danish (DA)	Hermed erklærer Furuno Electric Co., Ltd., at ovennævnte radioudstyr er i overensstemmelse med direktiv 2014/53/EU, SI 2017/1206. EU/UK-overensstemmelseserklæringens fulde tekst kan findes på følgende internetadresse:
German (DE)	Hiermit erklärt die Furuno Electric Co., Ltd., dass der oben genannte Funkanlagentyp der Richtlinie 2014/53/EU, SI 2017/1206 entspricht. Der vollständige Text der EU/UK-Konformitätserklärung ist unter der folgenden Internetadresse verfügbar:
Estonian (ET)	Käesolevaga deklareerib Furuno Electric Co., Ltd., et ülalmainitud raadioseadme tüüp vastab direktiivi 2014/53/EL, SI 2017/1206 nõuetele. EL/GB vastavusdeklaratsiooni täielik tekst on kättesaadav järgmisel internetiaadressil:
Greek (EL)	Με την παρούσα η Furuno Electric Co., Ltd., δηλώνει ότι ο προαναφερθέντας ραδιοεξοπλισμός πληροί την οδηγία 2014/53/ΕΕ, SI 2017/1206. Το πλήρες κείμενο της δήλωσης συμμόρφωσης ΕΕ/UK διατίθεται στην ακόλουθη ιστοσελίδα στο διαδίκτυο:
English (EN)	Hereby, Furuno Electric Co., Ltd. declares that the above-mentioned radio equipment type is in compliance with Directive 2014/53/EU, SI 2017/1206. The full text of the EU/UK declaration of conformity is available at the following internet address:
French (FR)	Le soussigné, Furuno Electric Co., Ltd., déclare que l'équipement radioélectrique du type mentionné ci-dessus est conforme à la directive 2014/53/UE, SI 2017/1206. Le texte complet de la déclaration UE/RU de conformité est disponible à l'adresse internet suivante:
Croatian (HR)	Furuno Electric Co., Ltd. ovime izjavljuje da je gore rečeno radijska oprema tipa u skladu s Direktivom 2014/53/EU, SI 2017/1206. Cjeloviti tekst EU/UK izjave o sukladnosti dostupan je na sljedećoj internetskoj adresi:
Italian (IT)	Il fabbricante, Furuno Electric Co., Ltd., dichiara che il tipo di apparecchiatura radio menzionato sopra è conforme alla direttiva 2014/53/UE, SI 2017/1206. Il testo completo della dichiarazione di conformità UE/RU è disponibile al seguente indirizzo Internet:
Latvian (LV)	Ar šo Furuno Electric Co., Ltd. deklarē, ka augstāk minēts radioiekārta atbilst Direktīvai 2014/53/ES, SI 2017/1206. Pilns ES/AK atbilstības deklarācijas teksts ir pieejams šādā interneta vietnē:

Lithuanian (LT)	Aš, Furuno Electric Co., Ltd., patvirtinu, kad pirmiau minėta radijo įrenginių tipas atitinka Direktyvą 2014/53/ES, SI 2017/1206. Visas ES/JK atitikties deklaracijos tekstas prieinamas šiuo interneto adresu:
Hungarian (HU)	Furuno Electric Co., Ltd. igazolja, hogy fent említett típusú rádióberendezés megfelel a 2014/53/EU, SI 2017/1206 irányelvnek. Az EU/EK-megfelelőségi nyilatkozat teljes szövege elérhető a következő internetes címen:
Maltese (MT)	B'dan, Furuno Electric Co., Ltd., niddikjara li msemmija hawn fuq-tip ta' tagħmir tar-radju huwa konformi mad-Direttiva 2014/53/UE, SI 2017/1206. It-test kollu tad-dikjarazzjoni ta' konformità tal-UE/RU huwa disponibbli f'dan l-indirizz tal-Internet li ġej:
Dutch (NL)	Hierbij verklaar ik, Furuno Electric Co., Ltd., dat het hierboven genoemde type radioapparatuur conform is met Richtlijn 2014/53/EU, SI 2017/1206. De volledige tekst van de EU/VK-conformiteitsverklaring kan worden geraadpleegd op het volgende internetadres:
Polish (PL)	Furuno Electric Co., Ltd. niniejszym oświadcza, że wyżej wymieniony typ urządzenia radiowego jest zgodny z dyrektywą 2014/53/UE, SI 2017/1206. Pełny tekst deklaracji zgodności UE/UK jest dostępny pod następującym adresem internetowym:
Portuguese (PT)	O(a) abaixo assinado(a) Furuno Electric Co., Ltd. declara que o mencionado acima tipo de equipamento de rádio está em conformidade com a Diretiva 2014/53/UE, SI 2017/1206. O texto integral da declaração de conformidade da EU/UK está disponível no seguinte endereço de Internet:
Romanian (RO)	Prin prezenta, Furuno Electric Co., Ltd. declară că echipamentul radio menționat mai sus este în conformitate cu Directiva 2014/53/UE, SI 2017/1206. Textul integral al declarației de conformitate UE/RU este disponibil la următoarea adresă internet:
Slovak (SK)	Furuno Electric Co., Ltd. týmto vyhlasuje, že vyššie spomínané rádiové zariadenie typu je v súlade so smernicou 2014/53/EÚ, SI 2017/1206. Úplné EÚ/SK vyhlásenie o zhode je k dispozícii na tejto internetovej adrese:
Slovenian (SL)	Furuno Electric Co., Ltd. potrjuje, da je zgoraj omenjeno tip radijske opreme skladen z Direktivo 2014/53/EU, SI 2017/1206. Celotno besedilo izjave EU/ZK o skladnosti je na voljo na naslednjem spletnem naslovu:
Finnish (FI)	Furuno Electric Co., Ltd. vakuuttaa, että yllä mainittu radiolaitetyyppi on direktiivin 2014/53/EU, SI 2017/1206 mukainen. EU/UK-vaatimustenmukaisuusvakuutuksen täysimittainen teksti on saatavilla seuraavassa internetosoitteessa:
Swedish (SV)	Härmed försäkrar Furuno Electric Co., Ltd. att ovan nämnda typ av radioutrustning överensstämmer med direktiv 2014/53/EU, SI 2017/1206. Den fullständiga texten till EU/Storbritannien-försäkran om överensstämmelse finns på följande webbadress:

Online Resource

http://www.furuno.com/en/support/red_doc

Notice for radiated immunity

The test for the radiated immunity is performed up to 2.7 GHz only without the special condition of spot frequency being applied. There is a chance that this equipment may interfere with allocated services in the frequency range of 2.7 GHz to 6 GHz, particularly in harbors, rivers, lake banks, etc.

FURUNO ELECTRIC CO., LTD.

9-52 Ashihara-cho,
Nishinomiya, 662-8580, JAPAN

・FURUNO Authorized Distributor/Dealer

All rights reserved. Printed in Japan

A : DEC. 2015
F20 : JUN. 1, 2023

Pub. No. IME-36460-F20

(MOHA) DRS6A_X-Class

0001910851 5