2000.6.12
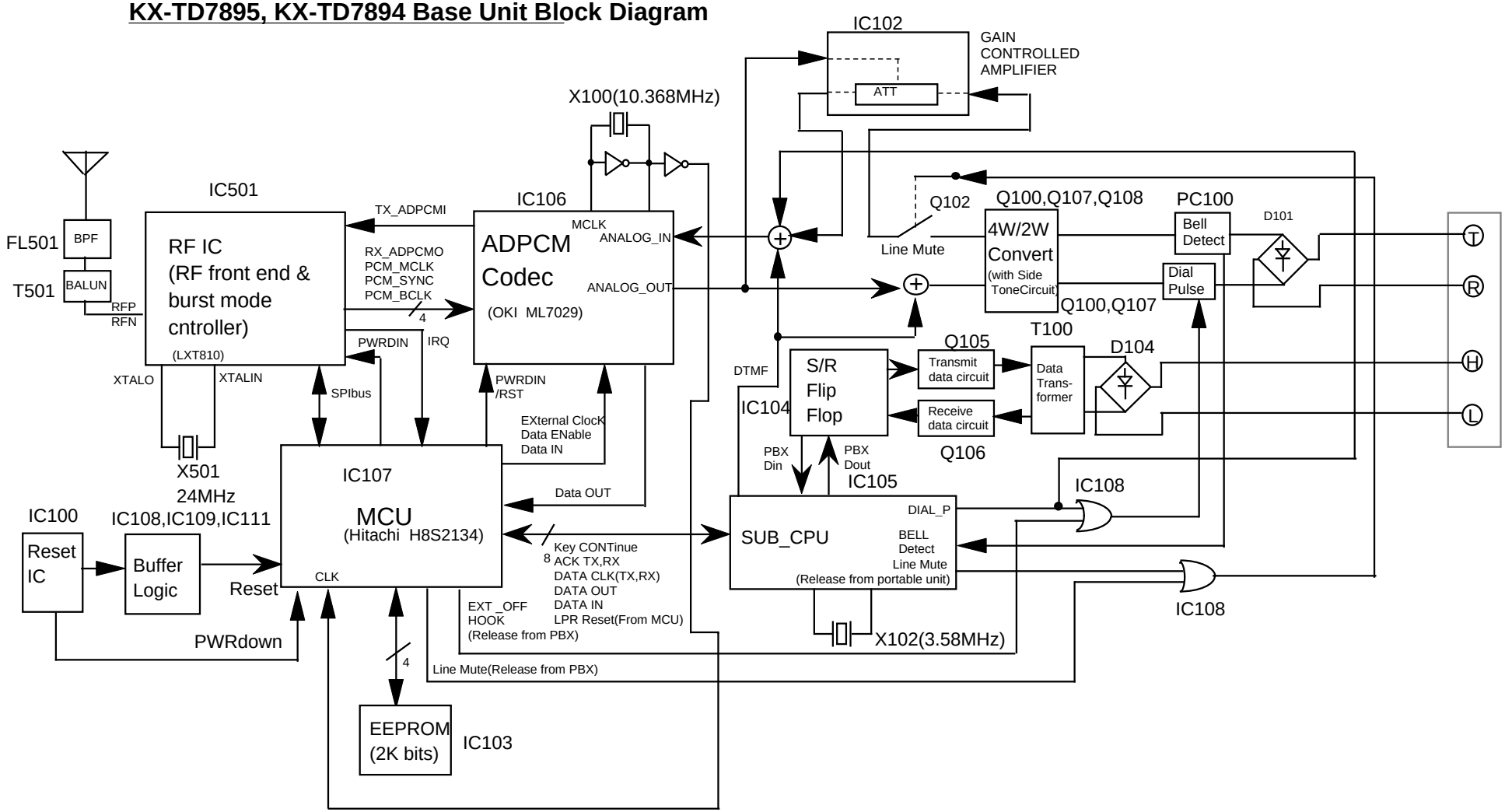
KX-TD7895, KX-TD7894 Base Unit Block Diagram