Sym.	Date	Revision	Signed	Checked
1				
2				
3				

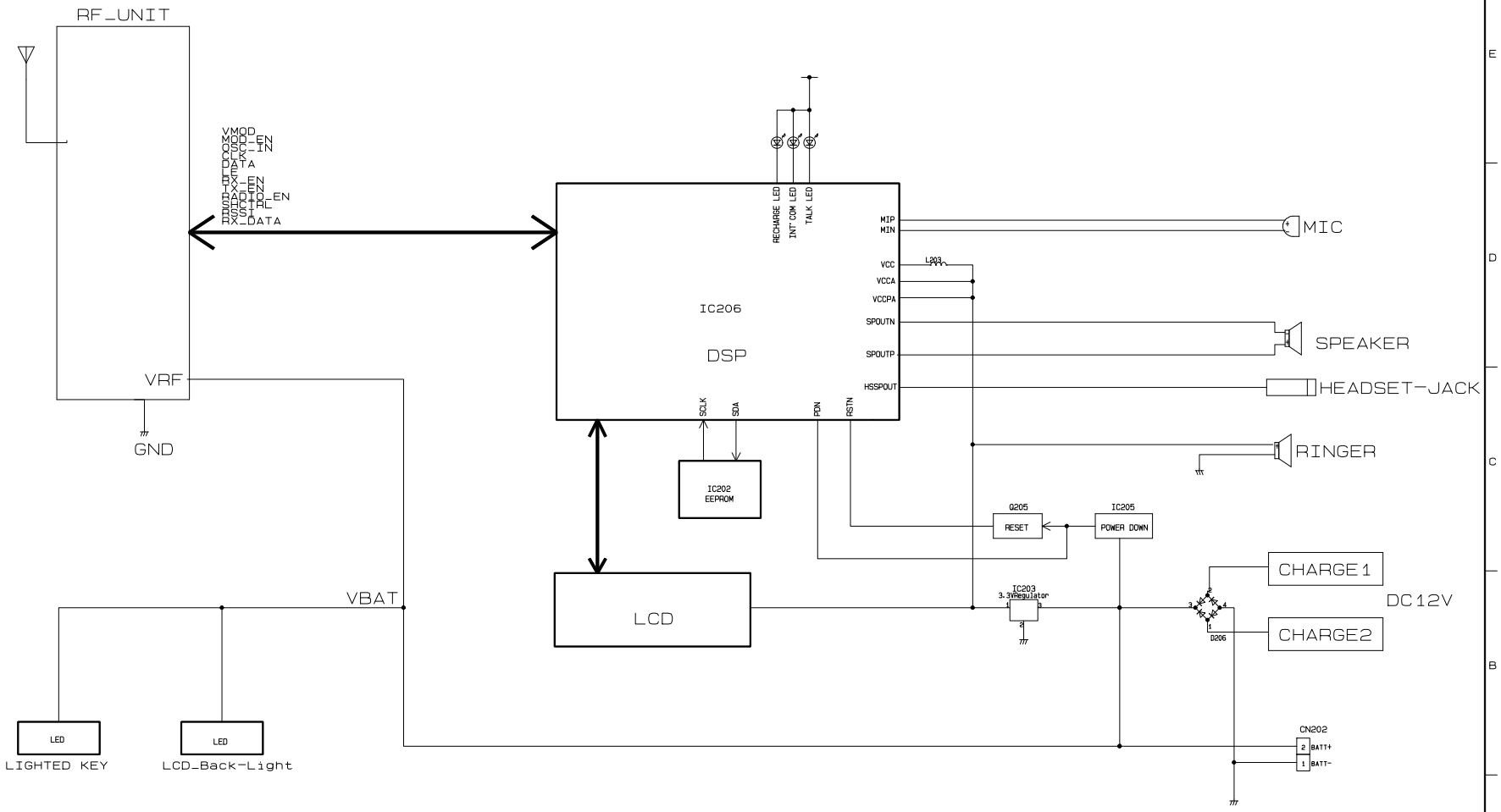

KYUSYU MATSUSHITA ELECTRIC CO., LTD ENGINEERING DEPARTMENT. TELECOM DIV					Model	KX-TC17*3R
Designed	Drawn	Checked	Appcoved	Rev.	Name	PQLP
@NAME	@NAME	@NAME	@NAME	@REV	Name	BLOCK DIAGRAM
@DATE	@DATE	@DATE	@DATE	Code 1AP	Sheet	002.SHT