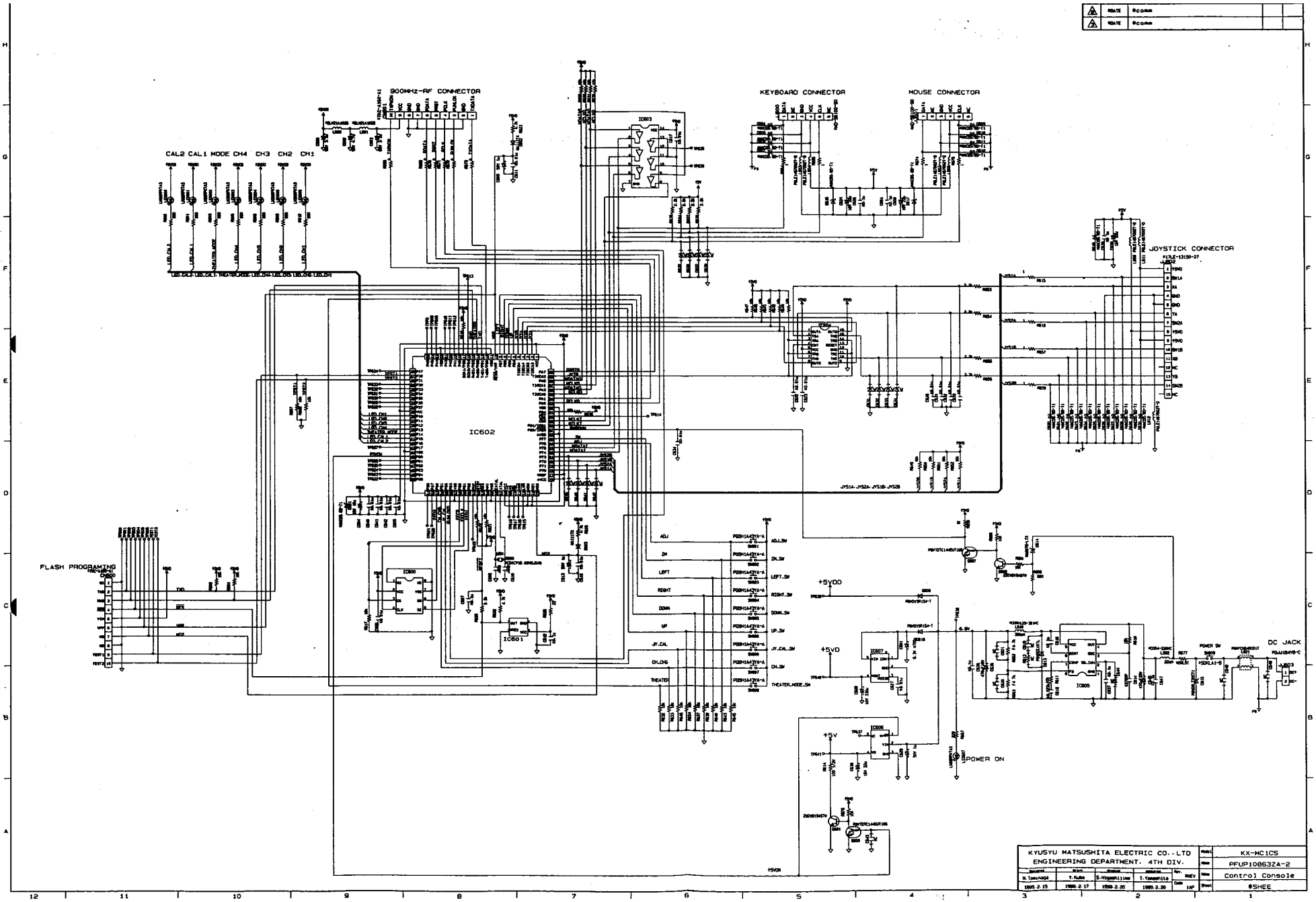
900MHz-RF CONNECTOR
KEYBOARD CONNECTOR
MOUSE CONNECTOR
JOYSTICK CONNECTOR
CAL2 CAL1 MODE CH4 CH3 CH2 CH1
IC602
IC603
IC604
IC605
IC606
IC607
IC608
IC601
FLASH PROGRAMING
ADJ
ZH
LEFT
RIGHT
DOWN
UP
JY.CAL
DLOG
THEATER
+5VDD
+5VD
+5V
POWER ON
POWER SW
DC JACK
KYUSYU MATSUSHITA ELECTRIC CO.,LTD
ENGINEERING DEPARTMENT. 4TH DIV.
KX-MC1CS
PFUP10863ZA-2
Control Console
H.Tomohaga
Y.Kubo
S.Higashiima
T.Yamashita
1995.2.15
1995.2.17
1995.2.20
1995.2.20

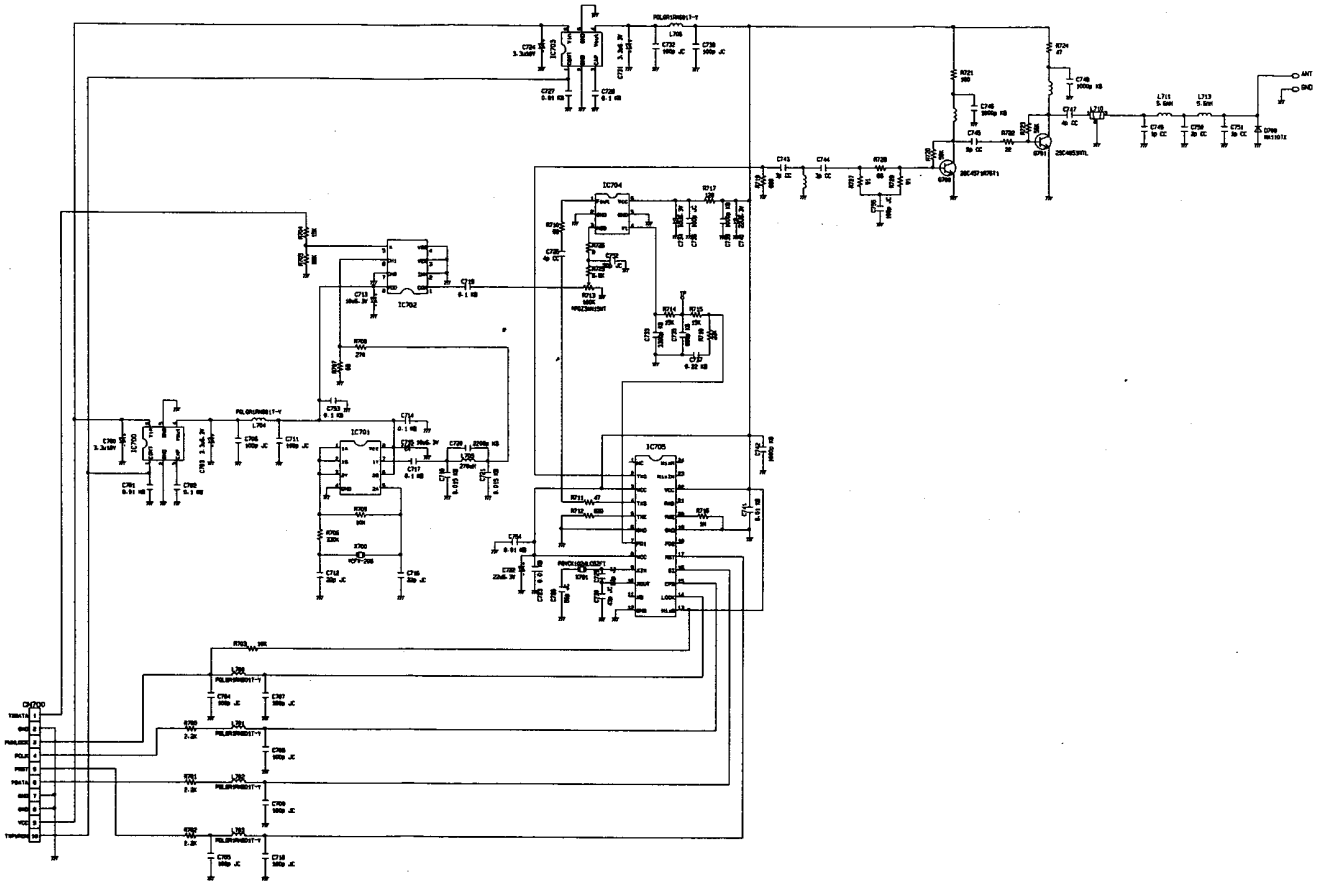

KYUSYU MATSUSHITA ELECTRIC CO., LTD ENGINEERING DEPARTMENT. 4TH DIV.	Model	KX-HC1CS
	Name	POUP10857ZA-2-a
	Title	900MHz TX RF
	Sheet	1