EXHIBIT # : 5
FCC ID : ACJ927145L
OUR REF. : MKES02-F012
MODEL NO. : PV-L353D

Block Diagram
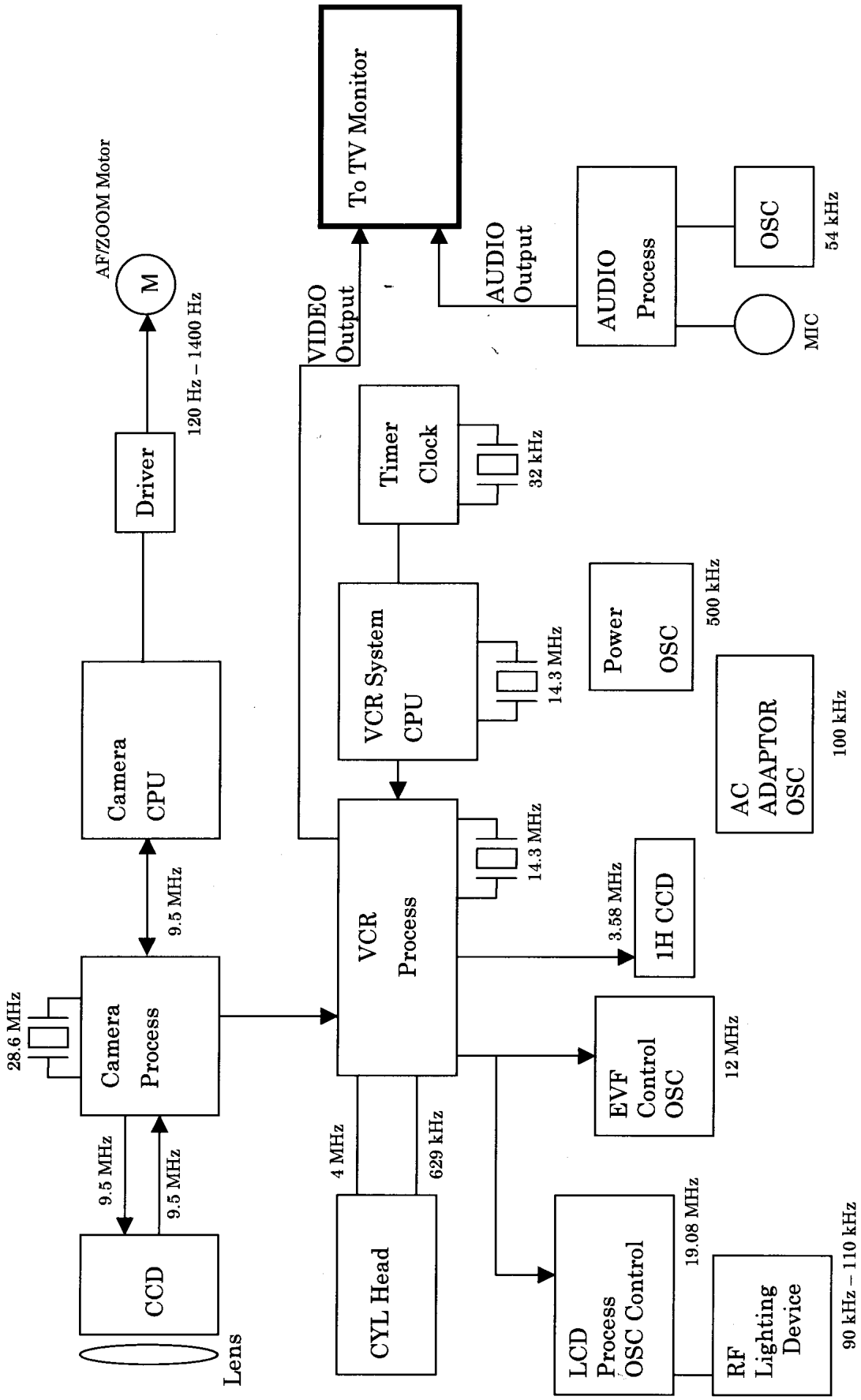
MOVIE BLOCK DIAGRAM