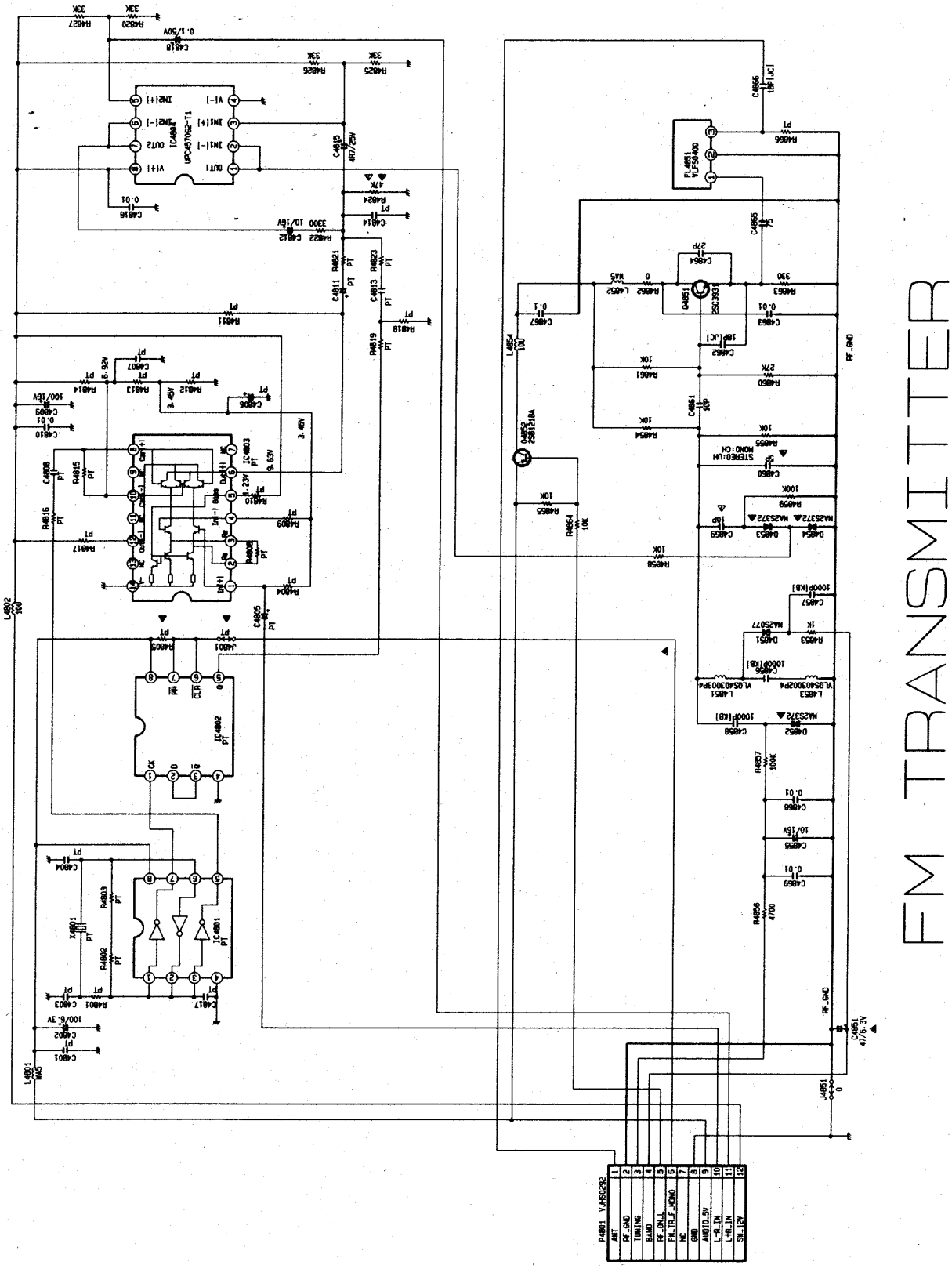EXHIBIT # : 4-3
FCC ID : ACJ927140TX
OUR REF. : MKES00-F016
MODEL NO. : PV-C921