MULTI(PX) SERIES POWER

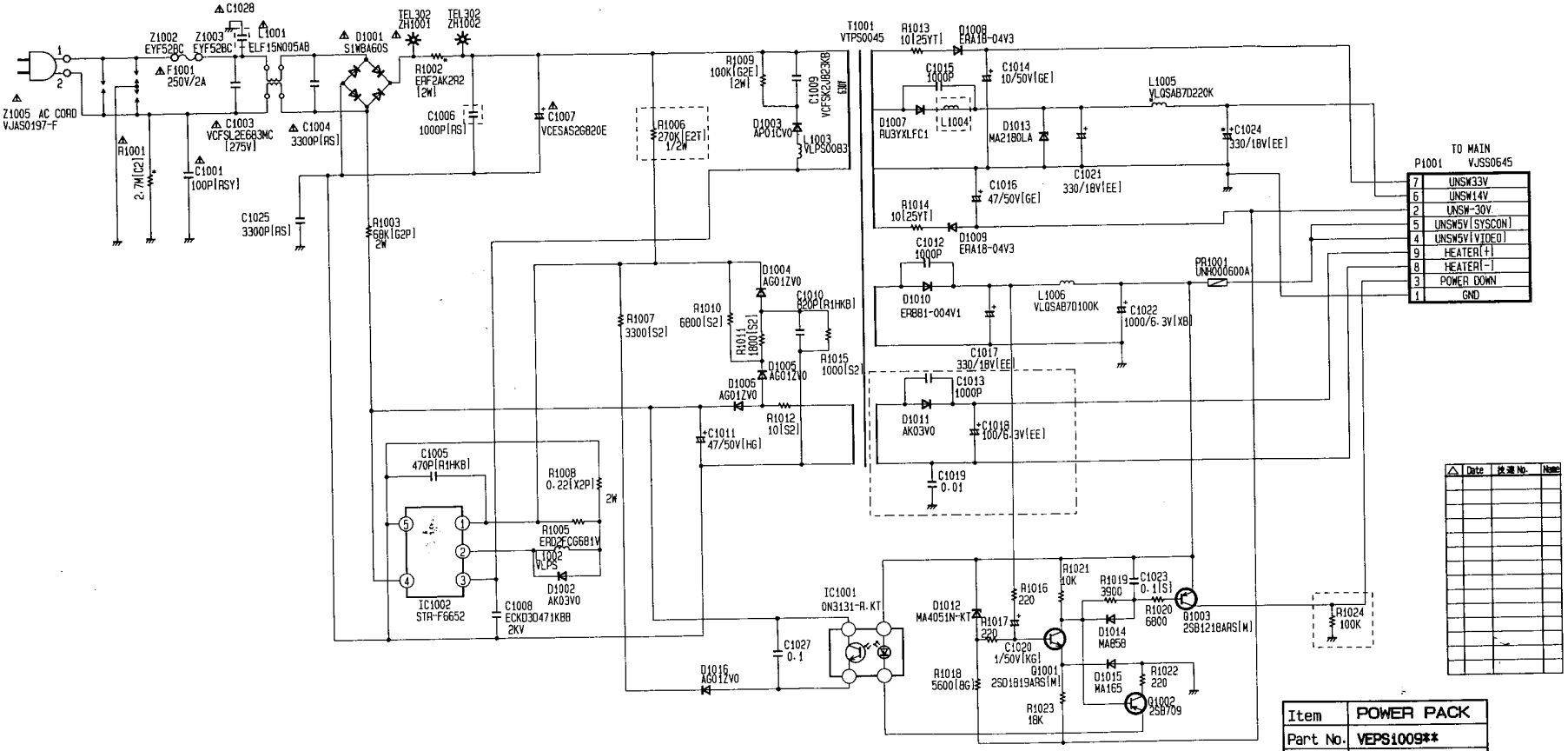

Item	POWER PACK		
Part No.	VEPS1009**		
Applicable Models	MULTI(PX) SERIES		
Date of Issue	98.08.27	Drawn by	M.YOSHIDA

V1009.001-1

△	Date	改造 No.	Name

EXHIBIT # 2

FIG NO.

FCC ID: ACJ927113AHP

MODEL NO. NV-HD7060PX

OUR REF.: MKS98-F012