BLOCK DIAGRAM

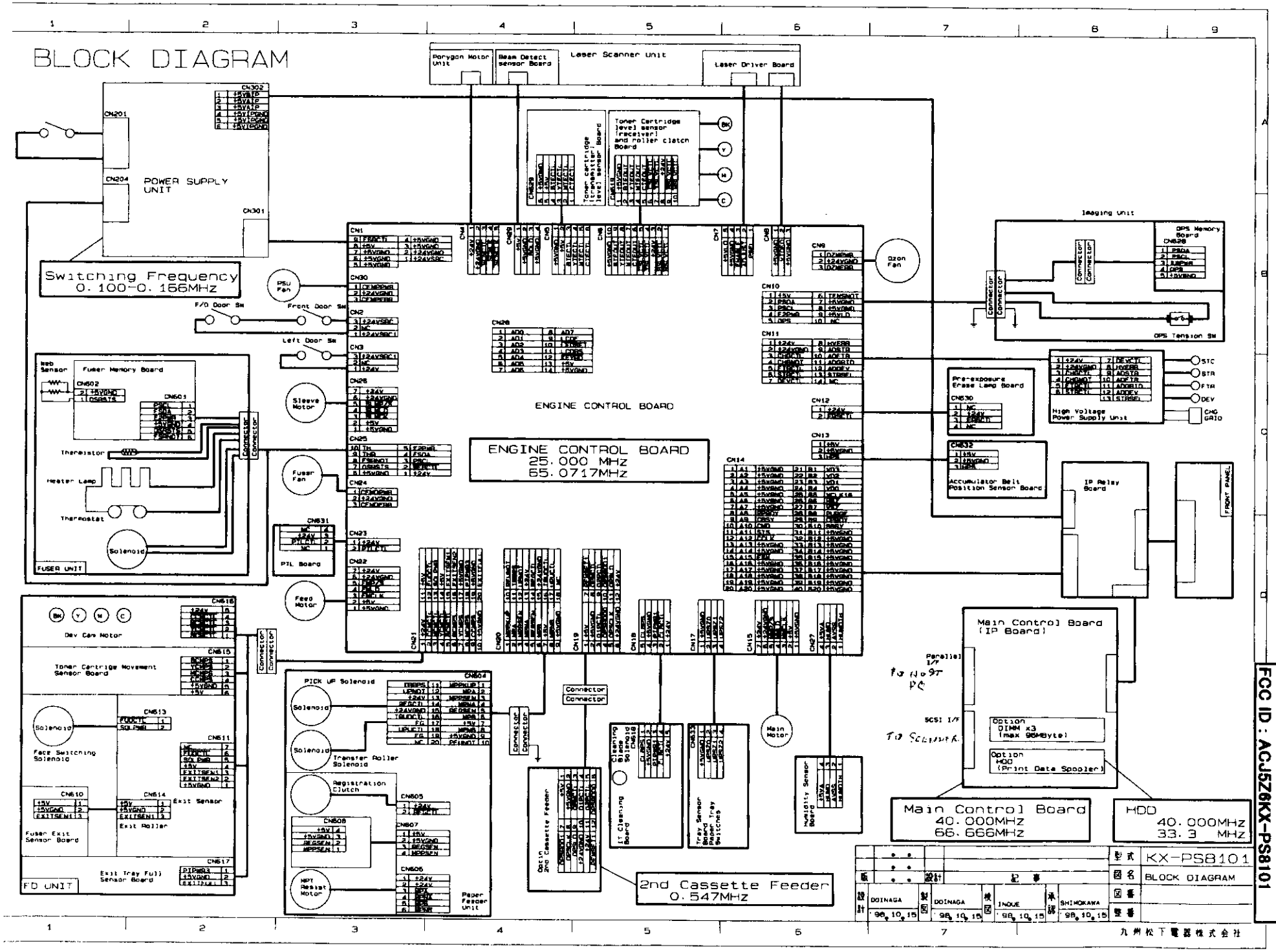

EXHIBIT #5
Fty Control No.: KM6-98-F004
FCC ID : ACJ5Z6KX-PS8101