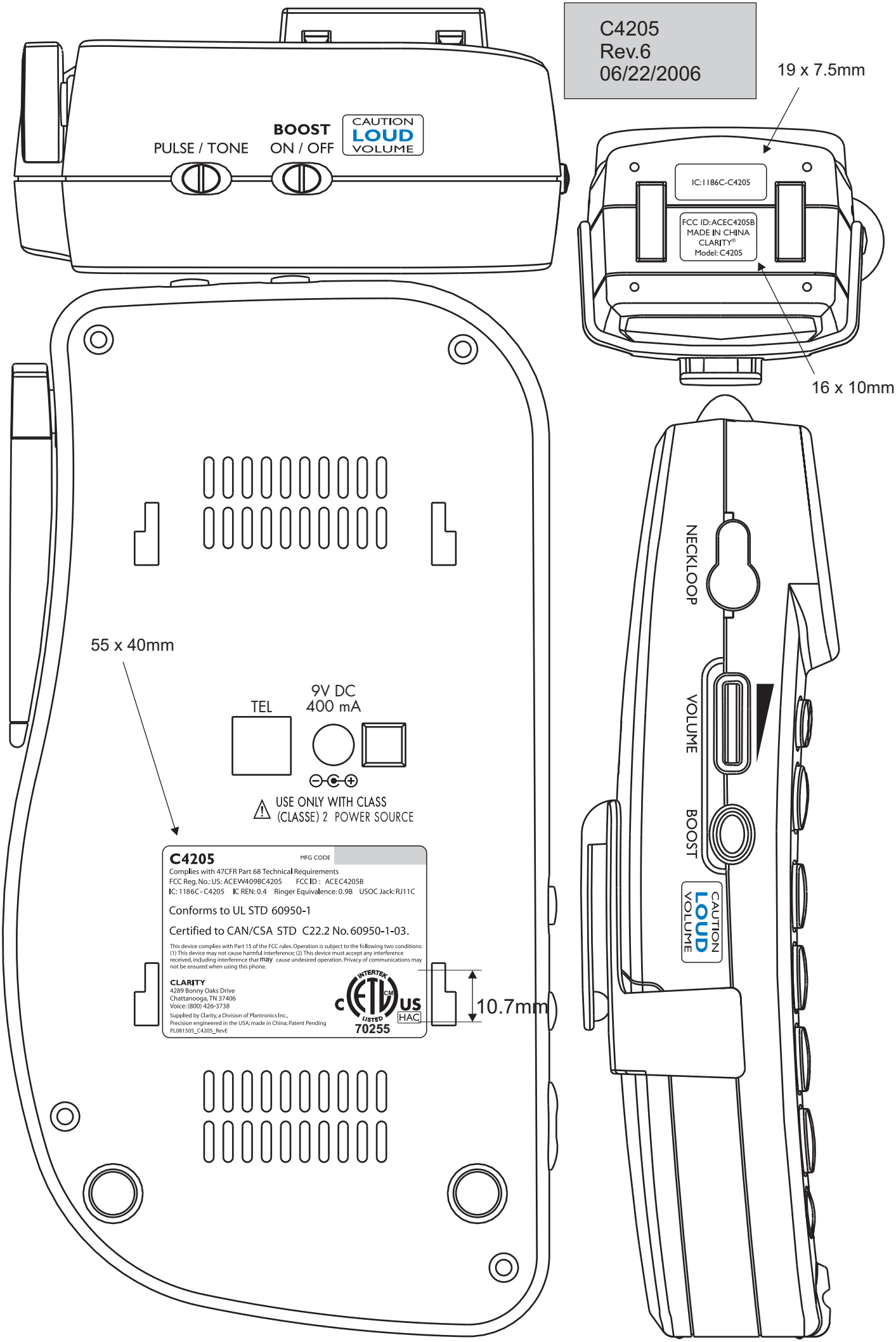C4205
Rev.6
06/22/2006