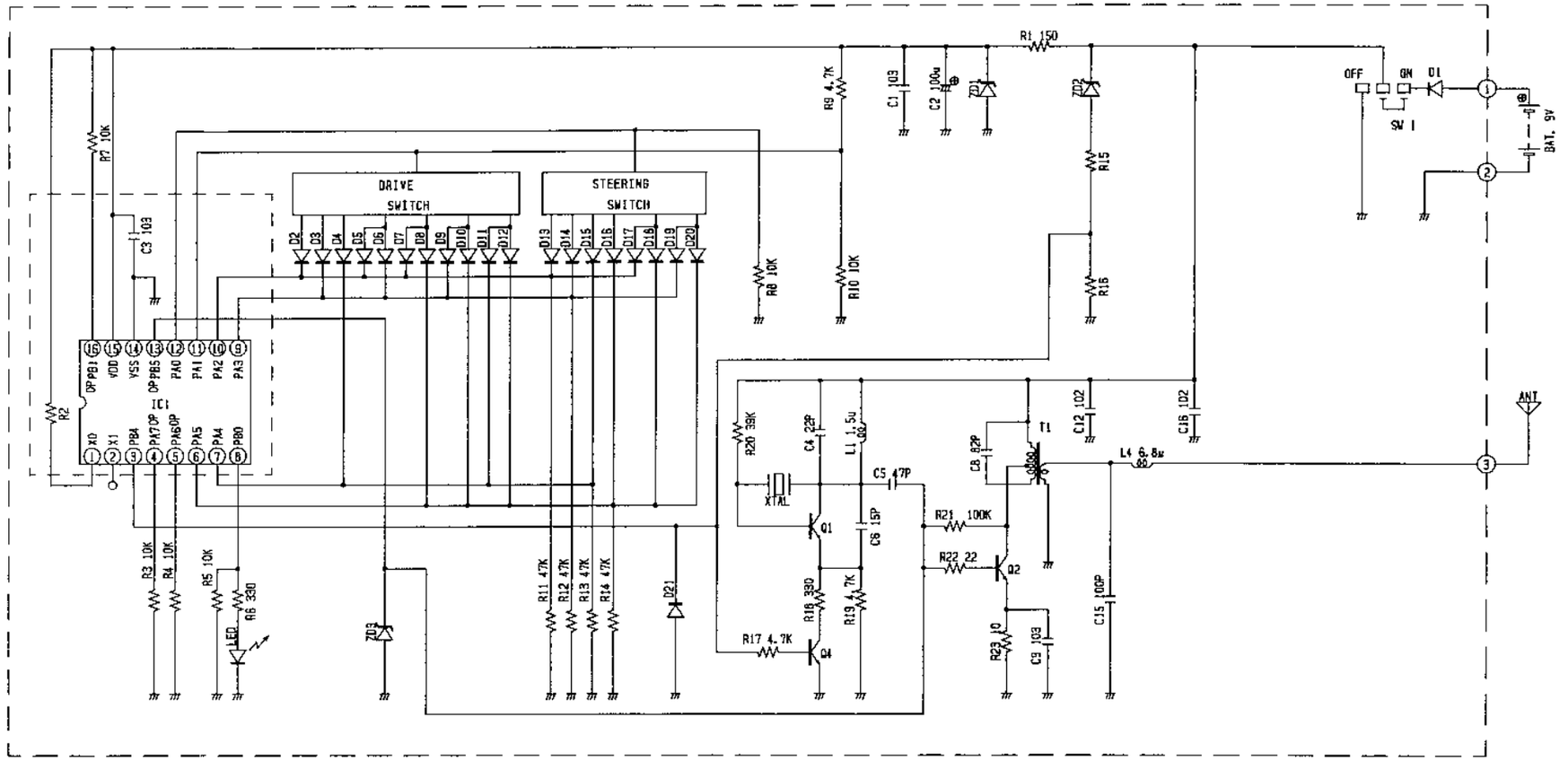

PA5	PA4	PA3	PA2	FORK2	FORK3	FORK4	COMMENT	
0	1	1	1	PA4	PA3	PA2	-	F6
0	1	0	1	PA4	-	PA2	-	-
0	1	0	0	PA4	-	-	L5	F5
0	1	1	0	PA4	PA3	-	L4	F4
0	0	1	0	-	PA3	-	L3	F3
0	0	1	1	-	PA3	PA2	L2	F2
0	0	0	1	-	-	PA2	L1	F1
0	0	0	0	-	-	-	STOP	STOP
1	0	0	0	PA5	-	-	R1	-
1	0	0	1	PA5	-	PA2	R2	B1
1	0	1	1	PA5	PA3	PA2	R3	B2
1	0	1	0	PA5	PA3	-	R4	B3
1	1	1	0	PA5	PA3	PA4	R5	B4
1	1	0	0	PA5	-	PA4	-	B5
1	1	0	1	PA5	PA2	PA4	-	-

IC1	SPMC01 or SPMC05A	ZD1	4.3V-20mA
Q1	2SC1815(Y)	ZD2	4.3V-20mA
Q2	2SC1815(Y)	ZD3	4.3V-20mA
Q3	-	D1-21	1N4148
Q4	2SC1815(Y)	LED	
T1	T100	XT	27.145MHz KDSC
T2	-	SW1	
L1	LAL04NA 1.5u		
L2	-		
L3	-		
L4	LAL04NA 6.8u		

PA5	SPMC05A	SPMC01A
R2	30K	47K
R15	6.8K	1.5K
R16	22K	1.5K

DIMENSIONAL ⊕ ⊟ mm	SCALE	CREATE DATE MAY-17-2001	VER. 1.0 MAY-17-2001	DWG. No. F04052
THICKNESS	Q'TY	MATERIAL / FINISH		
SLIDE SLOPE	DESIGNED SUZUKI	MODEL CODE / NAME F0 / WIND SURFIN		
SHRINK	APPROVED	PARTS CODE / NAME Tx SCHEMATIC 27MHz FCC		