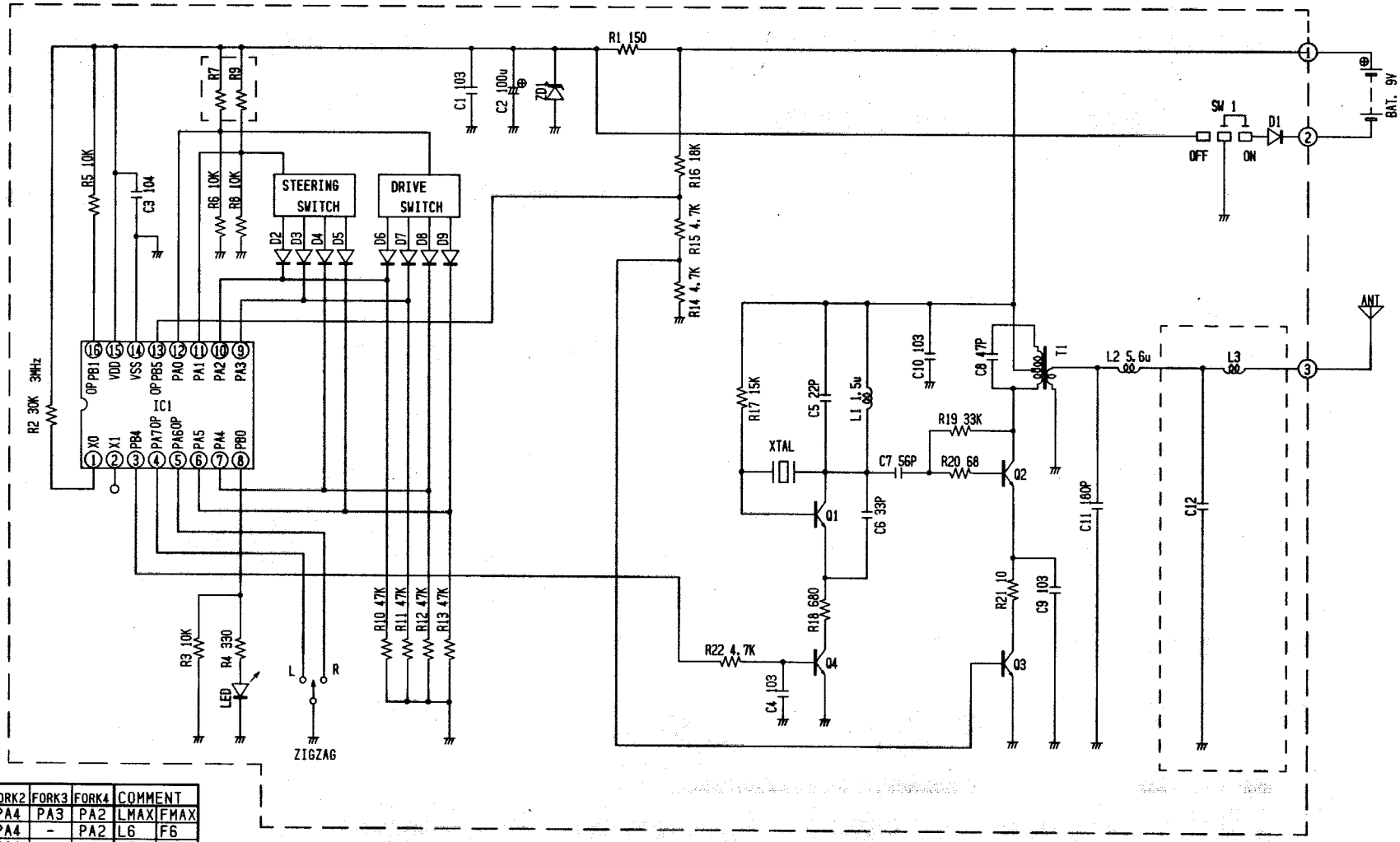

PA5	PA4	PA3	PA2	FORK2	FORK3	FORK4	COMMENT	
0	1	1	1	PA4	PA3	PA2	LMAX	FMAX
0	1	0	1	PA4	-	PA2	L6	F6
0	1	0	0	PA4	-	-	L5	F5
0	1	1	0	PA4	PA3	-	L4	F4
0	0	1	0	-	PA3	-	L3	F3
0	0	1	1	-	PA3	PA2	L2	F2
0	0	0	1	-	-	PA2	L1	F1
0	0	0	0	-	-	-	STOP	STOP
1	0	0	0	PA5	-	-	R1	B1
1	0	0	1	PA5	-	PA2	R2	B2
1	0	1	1	PA5	PA3	PA2	R3	B3
1	0	1	0	PA5	PA3	-	R4	B4
1	1	1	0	PA5	PA3	PA4	R5	B5
1	1	0	0	PA5	-	PA4	R6	B6
1	1	0	1	PA5	PA2	PA4	RMAX	BMAX

BAND	R6	R7	R8	R9
NORMAL	10K	OPEN	10K	OPEN
A	OPEN	4.7K	10K	OPEN
B	10K	OPEN	OPEN	4.7K
C	OPEN	4.7K	OPEN	4.7K

IC1	SPMC01 or SPMC05A	ZD1	RD4.7E B1
Q1	2SC1815(Y)	D1-9	1N4148
Q2	2SC1815(Y)	LED	
Q3	2SC1815(Y)		
Q4	2SC1815(Y)		
XT	27.145MHz KDSC		
T1	318B		
L1	LAL04NA 1.5u		
L2	LAL04NA 5.6u		

DIMENSIONAL mm	SCALE	CREATE DATE FEB-03-2000	VER. 1.2 MAY-26-2000	DWG. No. CN4050A
THICKNESS	Q'TY	MATERIAL / FINISH		
SLIDE SLOPE	DESIGNED YUKIO	MODEL CODE / NAME CN / ZIGZAG 2		
SHRINK	APPROVED	PARTS CODE / NAME Tx SCHEMATIC 27MHz		

TOYPACK TOYPACK CREATION LTD. TEL 047-454-1189 FAX 047-454-4889