THIS IS A CAD GENERATED DOCUMENT
- DO NOT REUSE MANUALLY -

#		
1.	ALL CAPACITOR VALUES ARE IN MICROFARADS, UNLESS OTHERWISE SPECIFIED.	

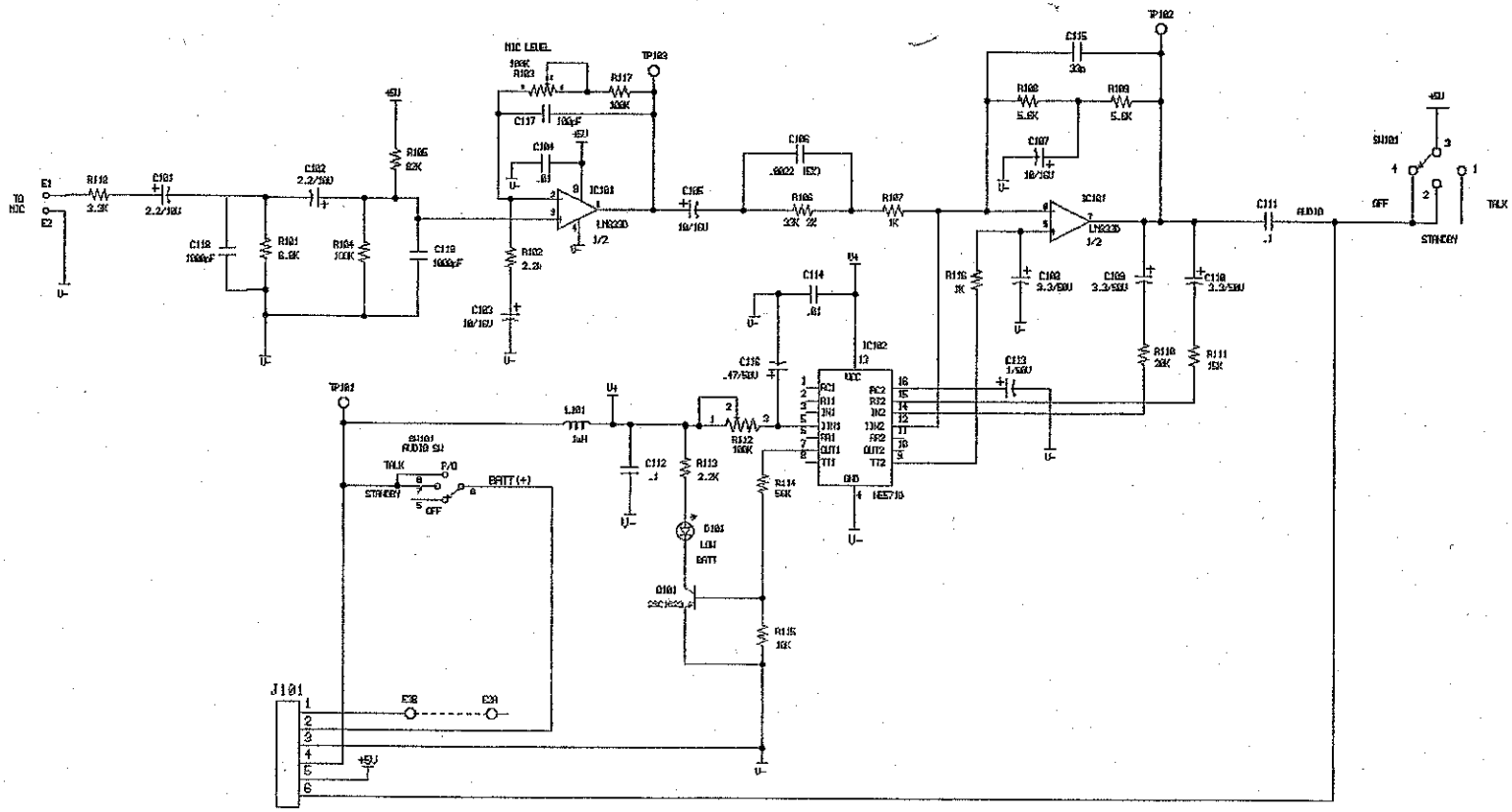

A		YFLUO	10/27/89	RDOY
REV	ECN#	DRAFT	DATE	APPROVED

DRAFT	DATE	TITLE SCHEMATIC, TX AUDIO (32-1222)
CHECK	DATE	
DESIGN	DATE	
APPD	DATE	
APPD	DATE	

TANDY ELECTRONICS DESIGN

CAGE NO. F0139GAR	REV A	SIZE C	
SCALE NONE	SHEET 1 OF 2		