BLOCK DIAGRAM
FRS CRYSTAL VERSION

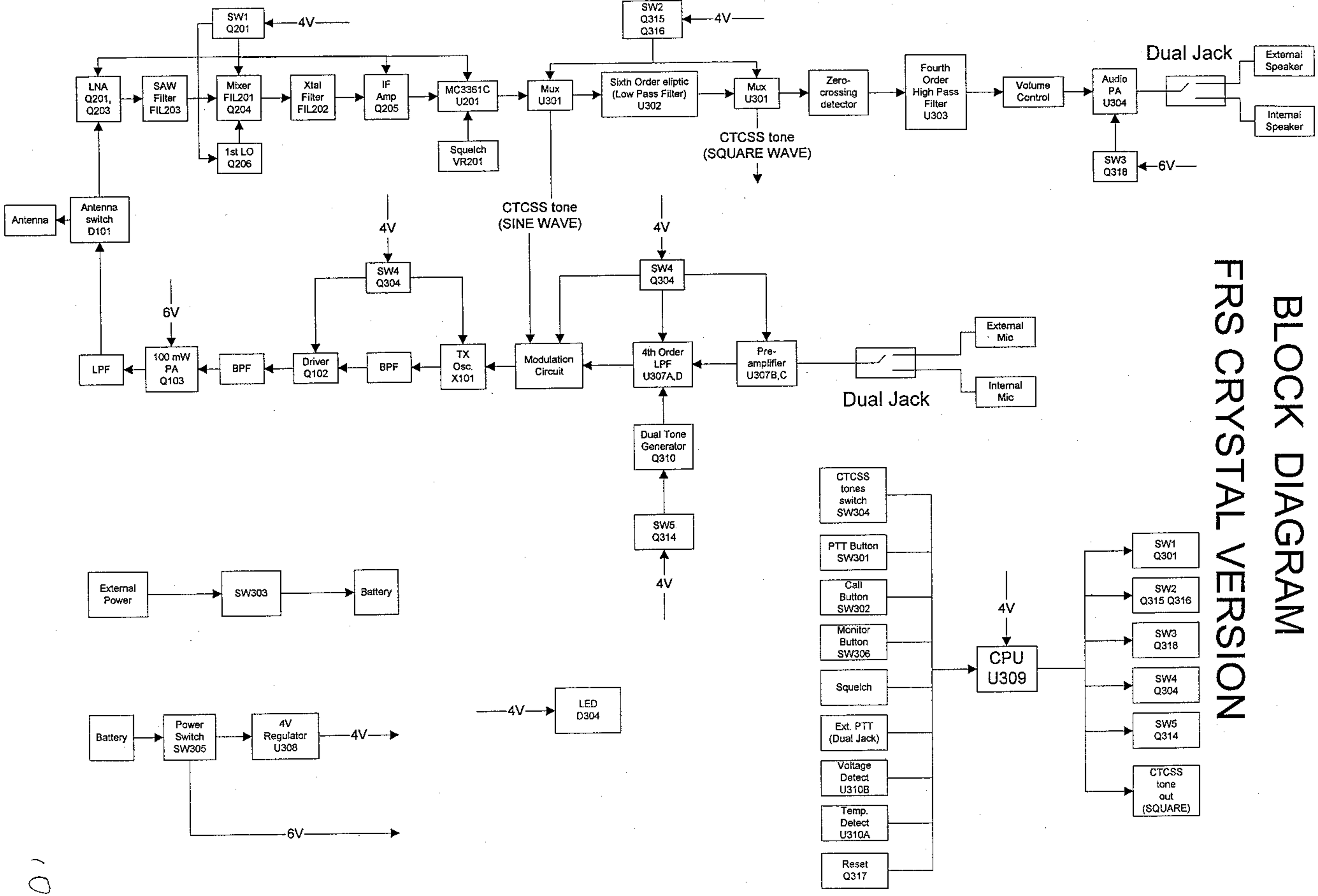

FCC ID: AAO2101803