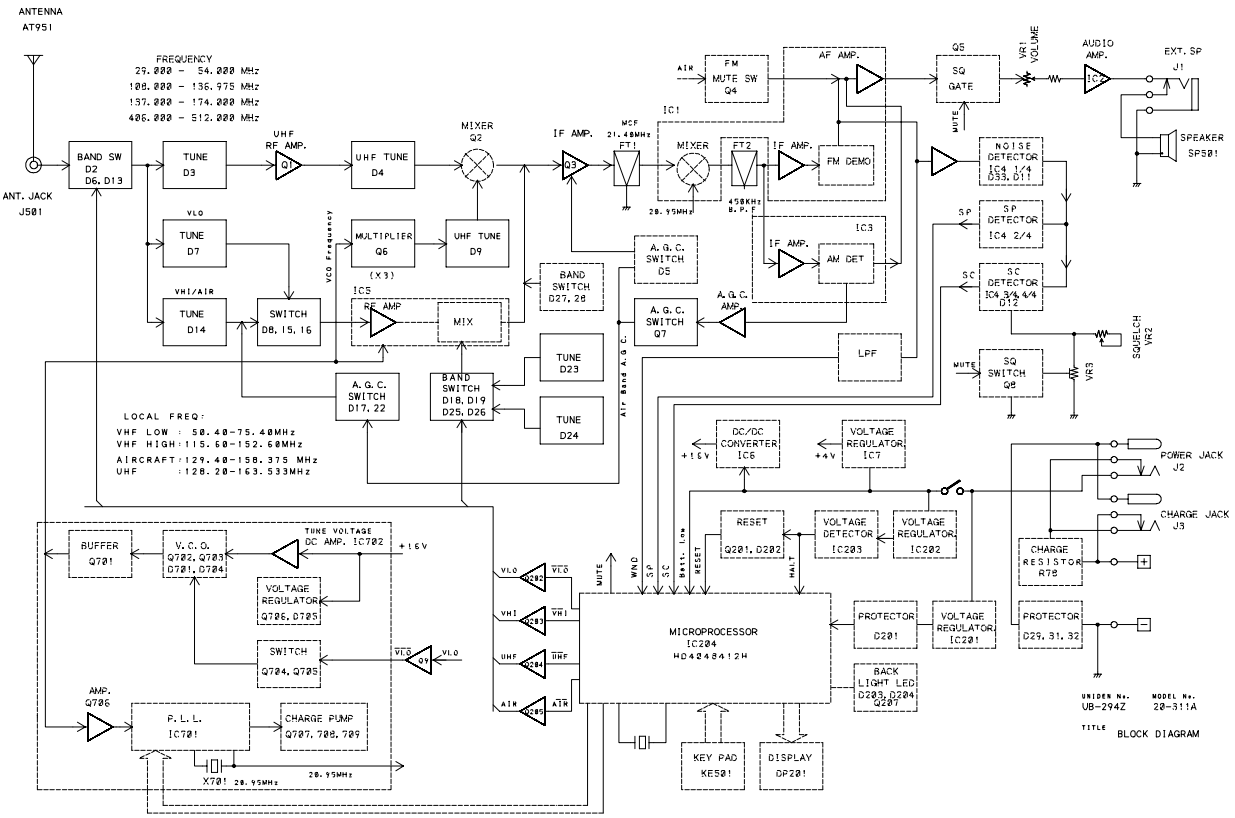
ANTENNA
AT951
ANT. JACK
J501
FREQUENCY
29.000 - 54.000 MHz
108.000 - 136.975 MHz
137.000 - 174.000 MHz
406.000 - 512.000 MHz
BAND SW
D2
D6, D13
TUNE
D3
UHF
RF AMP.
Q1
UHF TUNE
D4
MIXER
Q2
IF AMP.
Q3
MCF
21.40MHz
FT1
IC1
MIXER
FT2
IF AMP.
FM DEMO
20.95MHz
450KHz
B.P.F
AIR
FM
MUTE SW
Q4
AF AMP.
Q5
SQ
GATE
MUTE
VR1
VOLUME
AUDIO
AMP.
IC2
EXT. SP
J1
SPEAKER
SP501
NOISE
DETECTOR
IC4 1/4
D33, D11
SP
DETECTOR
IC4 2/4
SC
DETECTOR
IC4 3/4 4/4
D12
SQUELCH
VR2
VR3
MUTE
SQ
SWITCH
Q8
VLO
TUNE
D7
VCO Frequency
MULTIPLIER
Q6
(X3)
UHF TUNE
D9
A.G.C.
SWITCH
D5
IC3
IF AMP.
AM DET
BAND
SWITCH
D27, 28
VHI/AIR
TUNE
D14
SWITCH
D8, 15, 16
IC5
RF AMP
MIX
A.G.C.
SWITCH
Q7
A.G.C.
AMP.
LPF
TUNE
D23
TUNE
D24
A.G.C.
SWITCH
D17, 22
BAND
SWITCH
D18, D19
D25, D26
Air Band A.G.C.
LOCAL FREQ:
VHF LOW : 50.40-75.40MHz
VHF HIGH : 115.60-152.60MHz
AIRCRAFT : 129.40-158.375 MHz
UHF : 128.20-163.533MHz
DC/DC
CONVERTER
IC6
+16V
VOLTAGE
REGULATOR
IC7
+4V
POWER JACK
J2
CHARGE JACK
J3
RESET
Q201, D202
VOLTAGE
DETECTOR
IC203
VOLTAGE
REGULATOR
IC202
CHARGE
RESISTOR
R78
BUFFER
Q701
V.C.O.
Q702, Q703
Q701, Q704
TUNE VOLTAGE
DC AMP. IC702
+16V
VOLTAGE
REGULATOR
Q706, Q705
SWITCH
Q704, Q705
VLO
Q9
VLO
AMP.
Q706
P.L.L.
IC701
CHARGE PUMP
Q707, 708, 709
X701
20.95MHz
20.95MHz
VLO
Q202
VHI
Q203
UHF
Q204
AIR
Q205
MUTE
WND
SP
SC
Batt. Low
RESET
HALT
MICROPROCESSOR
IC204
HD42484121H
PROTECTOR
D201
VOLTAGE
REGULATOR
IC201
PROTECTOR
D29, 31, 32
BACK
LIGHT LED
D203, D204
Q207
KEY PAD
KE501
DISPLAY
DP201
UNIDEN No.
UB-294Z
MODEL No.
20-311A
TITLE
BLOCK DIAGRAM