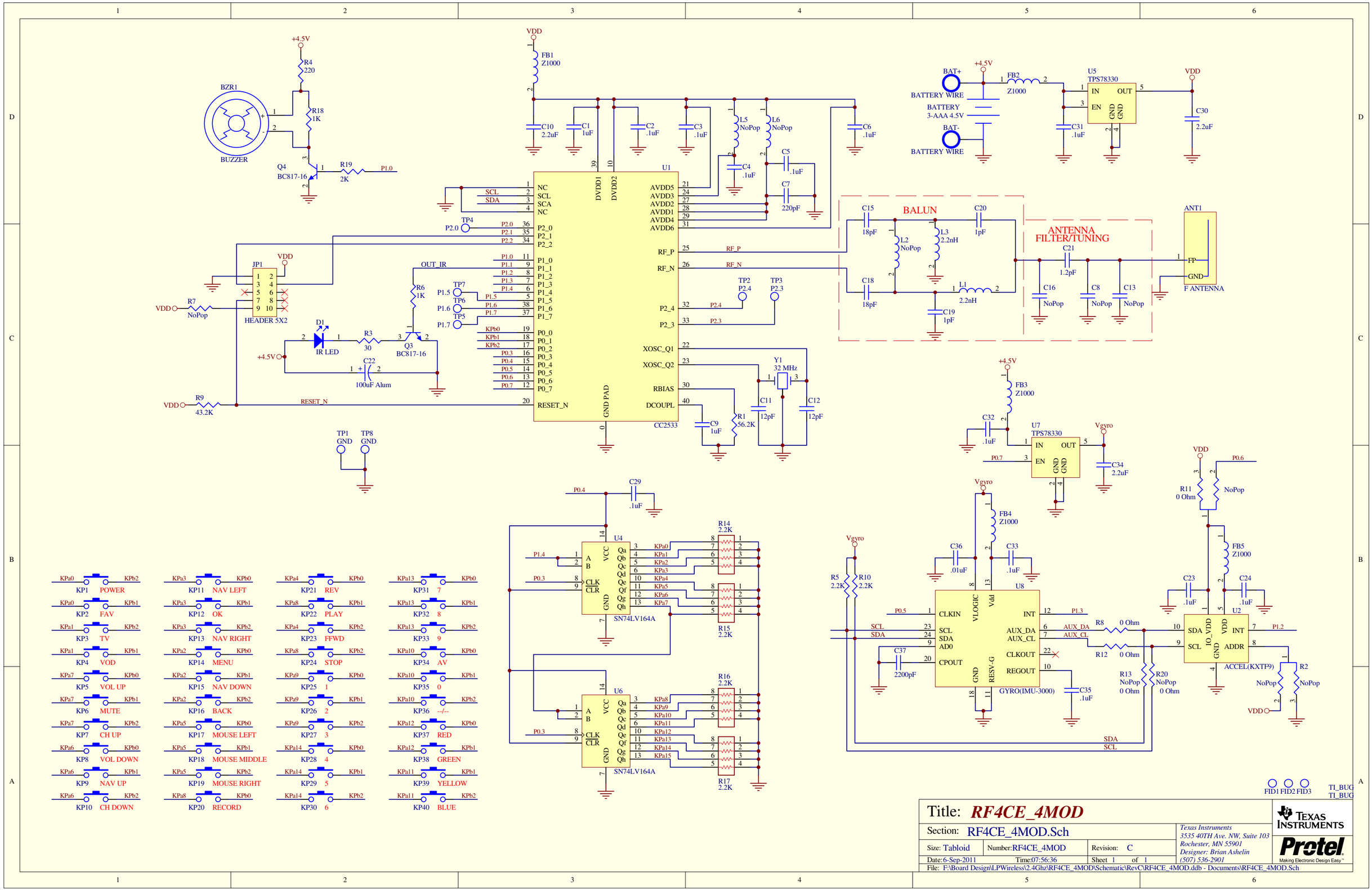

Title: *RF4CE_4MOD*

Section: RF4CE_4MOD.Sch

Size: Tabloid | Number: RF4CE_4MOD | Revision: C

Date: 6-Sep-2011 | Time: 07:56:36 | Sheet 1 of 1

File: F:\Board Design\LPWireless\2.4Ghz\RF4CE_4MOD\Schematic\RevC\RF4CE_4MOD.ddb - Documents\RF4CE_4MOD.Sch

Texas Instruments
3535 40TH Ave. NW, Suite 103
Rochester, MN 55901
Designer: Brian Ashelin
(507) 536-2901

Texas Instruments

Protel — Making Electronic Design Easy™