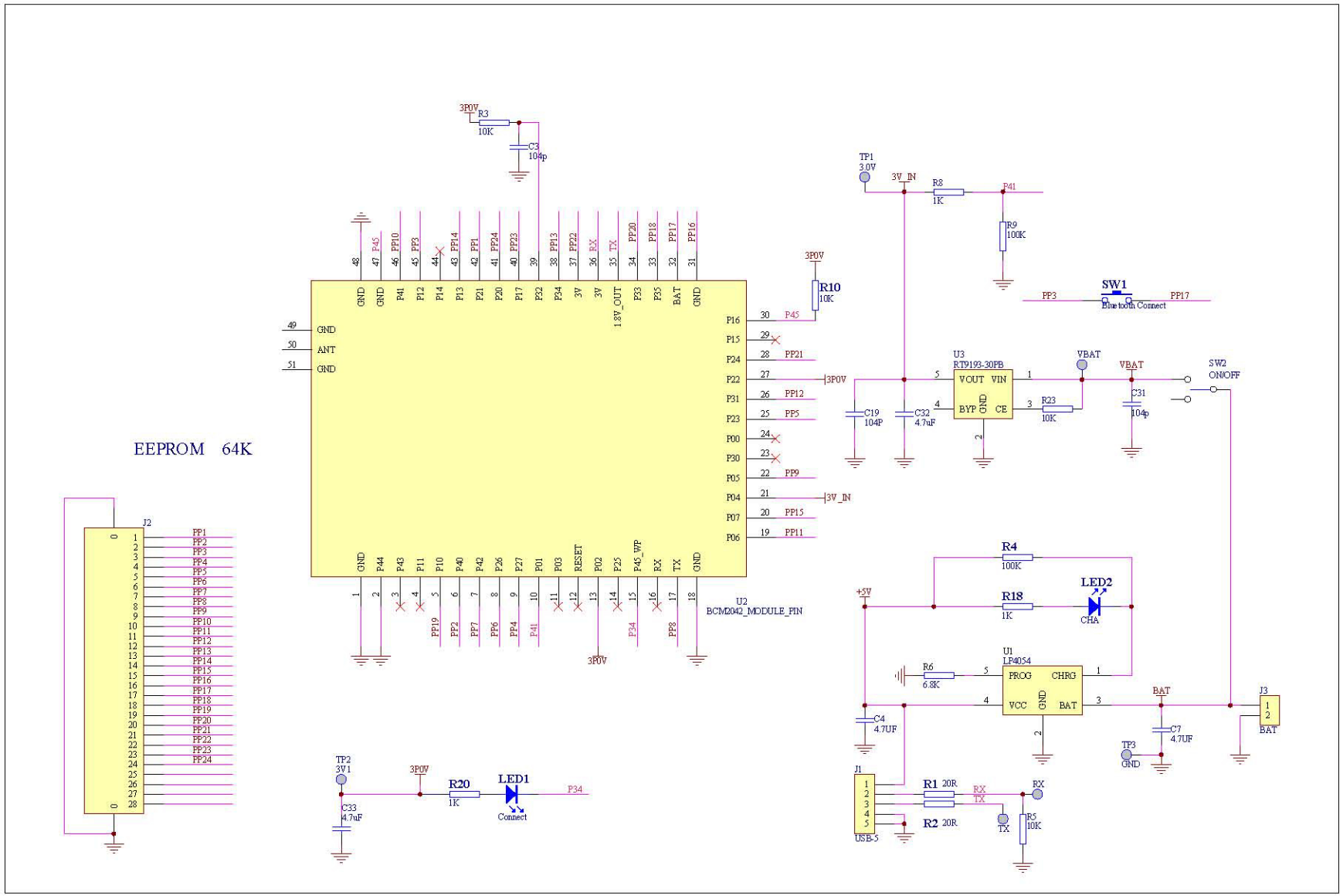
EEPROM 64K
J2
U2
BCM2042_MODULE_PIN
U3
RT9193-30PB
VOUT VIN
BYP GND CE
U1
LP4054
PROG CHRG
VCC GND BAT
SW1
Blue tooth Connect
SW2
ON/OFF
LED1
Connect
LED2
CHA
J1
USB-5
J3
BAT
TP1
3.0V
TP2
3V1
TP3
GND
R3
10K
C3
104p
R10
10K
R8
1K
R9
100K
R4
100K
R18
1K
R6
6.8K
C4
4.7UF
C7
4.7UF
C19
104P
C32
4.7uF
R23
10K
C31
104p
R20
1K
C33
4.7uF
R1 20R
R2 20R
R5
10K
3P0V
3V_IN
+5V
VBAT
RX
TX
P41
P34
PP3
PP17