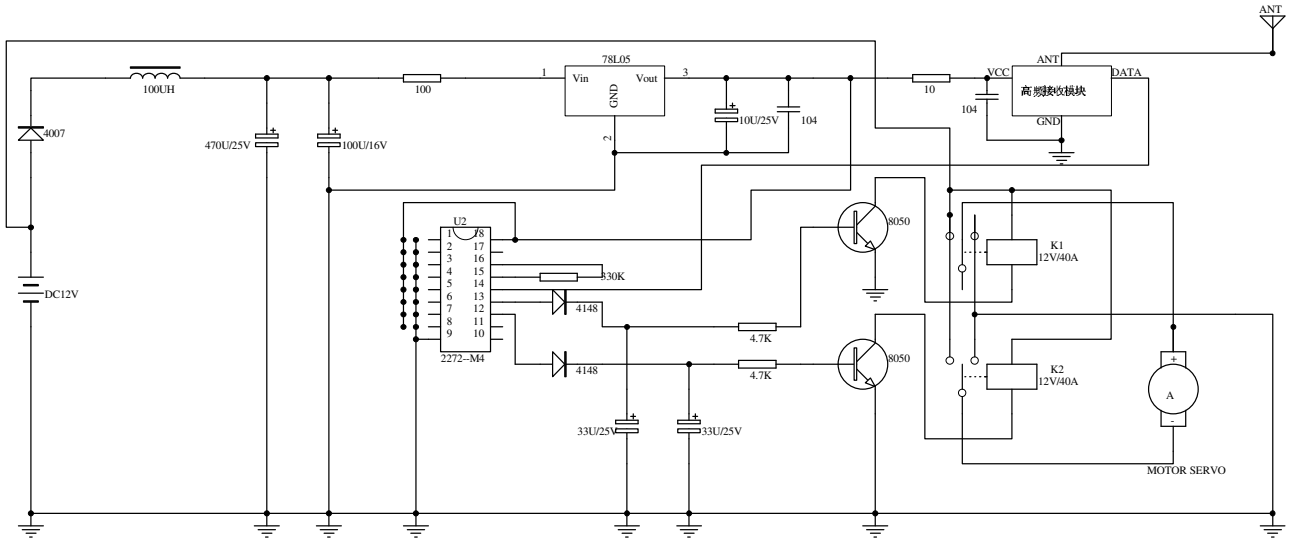

Title		
Size B	Number	Revision
Date: 8-Apr-2010	Sheet of	
File: D:\宝翔技术部\部\波技术部\爱莱克爱莱克.ddb	Drawn By:	