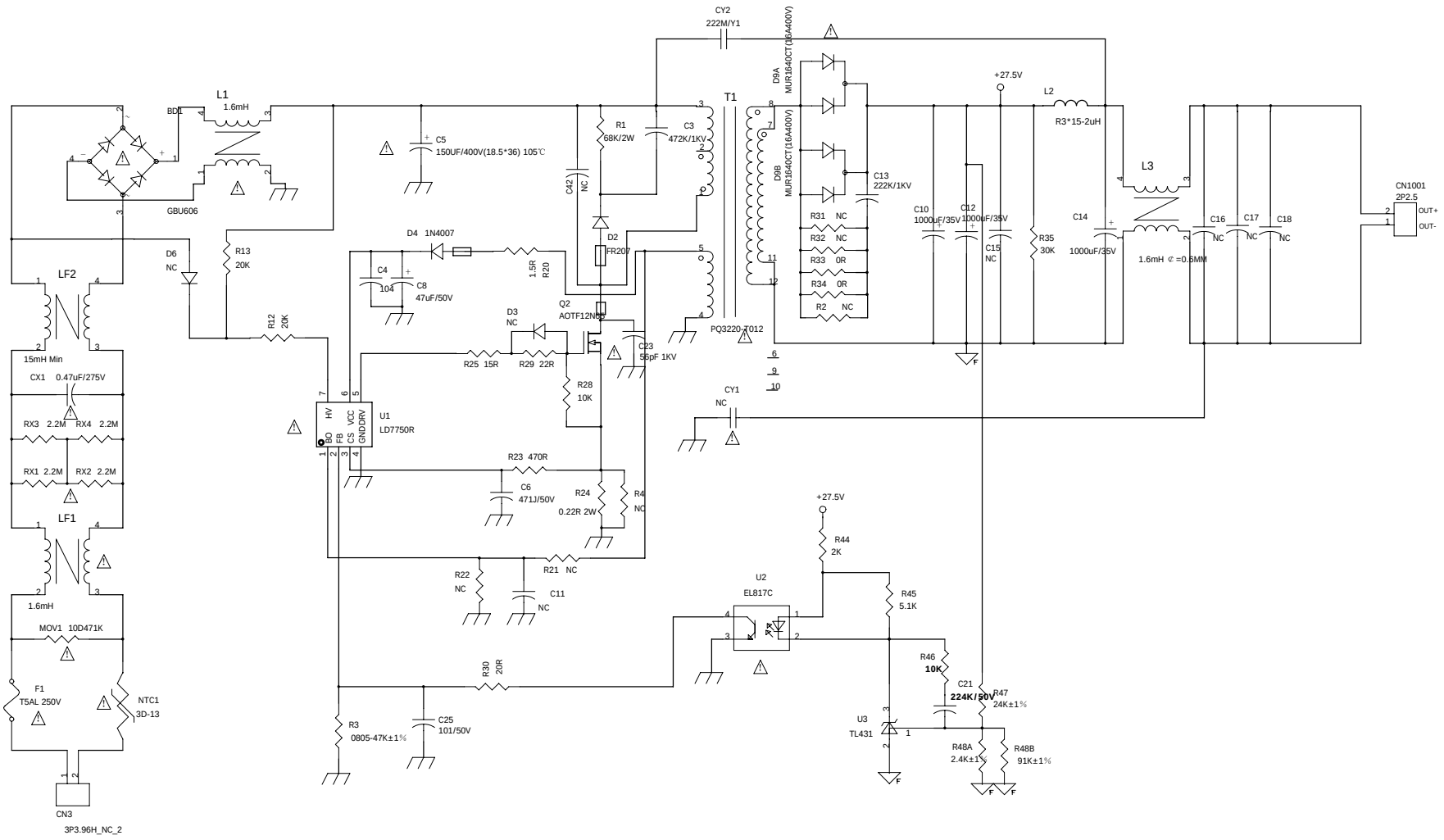

VER	REASON	BY	SIGNATURE		DATE	SHEN ZHEN ACT INDUSTRIAL CO.,LTD.	
A / 0			DESIGN:	欧阳效明	2014-1-2	MODEL:	ABX3250 V1.0
PAGE:	1 of 1		APPROVED:			TITLE:	ABX3250 V1.0-SCH