FCC REPORT
(LTE)

Applicant	:	Shenzhen ZKS Mobile IOT Tech. Co., Ltd
Address	:	Room 304, Building B, Huazhong University of Science and Technology Research Institute, No. 9, Yuexing 3rd Road, Nanshan District, Shenzhen, Guangdong, China
Product Name	:	YFL Temperature & Humidity AIoT Datalogger
Brand Mark	:	YFL
Model	:	S6SA
FCC ID	:	2BMOJ-S6SA
Report Number	:	BLA-EMC-202503-A9102
Date of Receipt	:	Mar. 24, 2025
Date of Test	:	Mar. 24, 2025 to July 14, 2025
Test standard	:	FCC CFR Title 47 Part 2 FCC CFR Title 47 Part 22 Subpart H FCC CFR Title 47 Part 24 Subpart E FCC CFR Title 47 Part 27
Test result	:	PASS

Compiled by: Hugh **Review by:** Xavier **Approved by:** Blue Zheng

Issued Date: July 14, 2025

BlueAsia of Technical Services(Shenzhen) Co.,Ltd.

Address: Building C, No. 107, Shihuan Road, Shiyan Sub-District, Baoan District, Shenzhen, Guangdong Province, China

The test report is effective only with both signature and specialized stamp and The result(s) shown in this report refer only to the sample(s) tested. Without written approval of BlueAsia, this report can't be reproduced except in full. The results described in this report do not represent the quality or characteristics of the sampled batch, nor do they represent any similar or identical products that are not explicitly stated.

Table of Contents

Page

1 GENERAL INFORMATION 4

1.1 CLIENT INFORMATION 4
1.2 GENERAL DESCRIPTION OF E.U.T. 4

2 TEST SUMMARY 5

3 TEST CONFIGURATION 6

3.1 TEST MODE 6
3.2 TEST ENVIRONMENT AND MODE 8
3.3 CONFIGURATION DIAGRAM OF EUT 8
3.4 AUXILIARY EQUIPMENT 8
3.5 TEST ENVIRONMENT 8

4 LABORATORY INFORMATION 9

4.1 LABORATORY AND ACCREDITATIONS 9
4.2 MEASUREMENT UNCERTAINTY 9

5 TEST EQUIPMENT 10

6 TEST RESULTS 12

6.1 CONDUCTED OUTPUT POWER 12
6.2 PEAK-TO-AVERAGE RATIO 13
6.3 OCCUPY BANDWIDTH 14
6.4 OUT OF BAND EMISSION AT ANTENNA TERMINALS,BAND EDGE 15
6.5 ERP, EIRP MEASUREMENT 16
6.6 SPURIOUS EMISSIONS AT ANTENNA TERMINAL 32
6.7 FREQUENCY STABILITY V.S. TEMPERATURE MEASUREMENT 40
6.8 FREQUENCY STABILITY V.S. VOLTAGE MEASUREMENT 41

7 TEST SETUP PHOTO 42

8 EUT CONSTRUCTIONAL DETAILS 43

BlueAsia

Revise Record

Version No.	Date	Description
01	July 14, 2025	Original

BlueAsia

1 General Information

1.1 Client Information

Applicant:	Shenzhen ZKS Mobile IOT Tech. Co., Ltd
Address:	Room 304, Building B, Huazhong University of Science and Technology Research Institute, No. 9, Yuexing 3rd Road, Nanshan District, Shenzhen, Guangdong, China
Manufacturer:	Shenzhen ZKS Mobile IOT Tech. Co., Ltd
Address:	Room 304, Building B, Huazhong University of Science and Technology Research Institute, No. 9, Yuexing 3rd Road, Nanshan District, Shenzhen, Guangdong, China
Factory	Shenzhen ZKS Mobile IOT Tech. Co., Ltd
Address	Room 304, Building B, Huazhong University of Science and Technology Research Institute, No. 9, Yuexing 3rd Road, Nanshan District, Shenzhen, Guangdong, China

1.2 General Description of E.U.T.

Product Name:	YFL Temperature & Humidity AIoT Datalogger
Test Model No.:	S6SA
Series model:	N/A
Operation Frequency range:	LTE Band 2:TX: 1850MHz-1910MHz, RX: 1930MHz-1990MHz LTE Band 4:TX: 1710MHz-1755MHz, RX: 2110MHz-2155MHz LTE Band 5:TX: 824MHz-849MHz, RX: 869MHz-894MHz LTE Band 12 TX:699MHz-716MHz, RX: 729MHz-746MHz LTE Band 13 TX: 777MHz-787MHz, RX: 746MHz-756MHz LTE Band 66 TX: 1710MHz-1780MHz, RX: 2110MHz-2200MHz
Modulation type:	QPSK
Antenna type:	Internal Antenna
Antenna gain:	LTE Band 2:TX: 1.8 dBi; LTE Band 4:TX: 1.8 dBi; LTE Band 5:TX: 1.8 dBi; LTE Band 12 TX: 1.8 dBi; LTE Band 13 TX: 1.8 dBi; LTE Band 66 TX: 1.8 dBi
Power supply:	Battery: DC3.7V Power supply: Model: GDB006L3-050200CU Input: 100-240V~50/60Hz 0.35A Output: 5V⎓2A
Hardware version:	N/A
Software version:	N/A
Remark:The Antenna Gain is supplied by the customer.BlueAsia is not responsible for this data	

BlueAsia

2 Test Summary

Test Items	Section in CFR 47	Result
RF Output Power	Part 2.1046 Part 27.50 (d)(4)	Pass
Peak-to-Average Ratio	Part 24.232 (d) Part 27.50(d)(5)	Pass
99% & -26 dB Occupied Bandwidth	Part 2.1049 Part 27.53(h)	Pass
Out of band emission, Band Edge	Part 22.917(a) Part 27.53 (h)	Pass
Field Strength of Spurious Radiation ERP EIRP Measurement	Part 2.1053 Part 27.53 (h)	Pass
Spurious Emissions at Antenna Terminal	Part 2.1051 Part 27.53 (h)	Pass
Frequency stability vs. temperature	Part 22.355 Part 24.235 Part 27.54 Part 2.1055(a)(1)(b)	Pass
Frequency stability vs. voltage	Part 22.355 Part 24.235 Part 27.54 Part 2.1055(d)(2)	Pass
Pass: The EUT complies with the essential requirements in the standard.		

BlueAsia

3 Test Configuration

3.1 Test mode

Test Mode Note 1	Description
TX	Keep the EUT in continuously transmitting mode with modulation.（Duty cycle>98%）
RX	Keep the EUT in receiving mode
TX Low channel	Keep the EUT in continuously transmitting mode in low channel
TX middle channel	Keep the EUT in continuously transmitting mode in middle channel
TX high channel	Keep the EUT in continuously transmitting mode in high channel

Note 1: The EUT was configured to measure its highest possible emission and/or immunity level. The test modes were adapted according to the operation manual for use; the EUT was operated in the engineering mode Note 2 to fix the TX or Rx frequency that was for the purpose of the measurements.

Operation Frequency List:

Regards to the operating frequency range, the lowest frequency, the middle frequency, and the highest frequency of channel were selected to perform the test, and the selected channels as below:

LTE Band 2(1.4MHz)			LTE Band 2(3MHz)		
Channel:		Frequency (MHz)	Channel		Frequency (MHz)
Lowest channel	18607	1850.70	Lowest channel	18615	1851.5
Middle channel	18900	1880.00	Middle channel	18900	1880.00
Highest channel	19193	1909.30	Highest channel	19185	1908.5
LTE Band 2(5MHz)			LTE Band 2(10MHz)		
Channel		Frequency (MHz)	Channel		Frequency (MHz)
Lowest channel	18625	1852.50	Lowest channel	18650	1855.00
Middle channel	18900	1880.00	Middle channel	18900	1880.00
Highest channel	19175	1907.50	Highest channel	19150	1905.00
LTE Band 2(15MHz)			LTE Band 2(20MHz)		
Channel		Frequency (MHz)	Channel		Frequency (MHz)
Lowest channel	18675	1857.50	Lowest channel	18700	1860.00
Middle channel	18900	1880.00	Middle channel	18900	1880.00
Highest channel	19125	1902.50	Highest channel	19100	1900.00

LTE Band 4(1.4MHz)			LTE Band 4(3MHz)		
Channel:		Frequency (MHz)	Channel		Frequency (MHz)
Lowest channel	19957	1710.70	Lowest channel	19965	1711.50
Middle channel	20175	1732.50	Middle channel	20175	1732.50
Highest channel	20393	1754.30	Highest channel	20385	1753.50
LTE Band 4(5MHz)			LTE Band 4(10MHz)		
Channel		Frequency (MHz)	Channel		Frequency (MHz)
Lowest channel	19975	1712.50	Lowest channel	20000	1715.00
Middle channel	20175	1732.50	Middle channel	20175	1732.50
Highest channel	20375	1752.50	Highest channel	20350	1750.00
LTE Band 4(15MHz)			LTE Band 4(20MHz)		
Channel		Frequency (MHz)	Channel		Frequency (MHz)
Lowest channel	20025	1717.50	Lowest channel	20050	1720.00
Middle channel	20175	1732.50	Middle channel	20175	1732.50
Highest channel	20325	1747.50	Highest channel	20300	1745.00

LTE Band 5(1.4MHz)			LTE Band 5(3MHz)		
Channel:		Frequency (MHz)	Channel		Frequency (MHz)
Lowest channel	20407	824.7	Lowest channel	20415	825.5
Middle channel	20525	836.5	Middle channel	20525	836.5
Highest channel	20643	848.3	Highest channel	20635	847.5
LTE Band 5(5MHz)			LTE Band 5(10MHz)		
Channel		Frequency (MHz)	Channel		Frequency (MHz)
Lowest channel	20425	826.5	Lowest channel	20450	829.0
Middle channel	20525	836.5	Middle channel	20525	836.5
Highest channel	20625	846.5	Highest channel	20600	844.0

LTE Band 12(1.4MHz)			LTE Band 12(3MHz)		
Channel:		Frequency (MHz)	Channel		Frequency (MHz)
Lowest channel	23017	699.7	Lowest channel	23025	700.5
Middle channel	23095	707.5	Middle channel	23095	707.5
Highest channel	23173	715.3	Highest channel	23165	714.0
LTE Band 12(5MHz)			LTE Band 12(10MHz)		
Channel		Frequency (MHz)	Channel		Frequency (MHz)
Lowest channel	23035	701.5	Lowest channel	23060	704
Middle channel	23095	707.5	Middle channel	23095	707.5
Highest channel	23155	713.5	Highest channel	23130	711

LTE Band 13(5MHz)			LTE Band 13(10MHz)		
Channel		Frequency (MHz)	Channel		Frequency (MHz)
Lowest channel	23205	779.5	Lowest channel	23230	782
Middle channel	23230	782	Middle channel	23230	782
Highest channel	23255	784.5	Highest channel	23230	782

LTE Band 66(1.4MHz)			LTE Band 66(3MHz)		
Channel:		Frequency (MHz)	Channel		Frequency (MHz)
Lowest channel	131979	1710.7	Lowest channel	131987	1711.5
Middle channel	132322	1745	Middle channel	132322	1745
Highest channel	132665	1779.3	Highest channel	132657	1778.5
LTE Band 66(5MHz)			LTE Band 66(10MHz)		
Channel		Frequency (MHz)	Channel		Frequency (MHz)
Lowest channel	131997	1712.5	Lowest channel	132022	1715
Middle channel	132322	1745	Middle channel	132322	1745
Highest channel	132647	1777.5	Highest channel	132622	1775
LTE Band 66(15MHz)			LTE Band 66(20MHz)		
Channel:		Frequency (MHz)	Channel		Frequency (MHz)
Lowest channel	132047	1717.5	Lowest channel	132072	1720
Middle channel	132322	1745	Middle channel	132322	1745
Highest channel	132597	1772.5	Highest channel	132572	1770

3.2 Test environment and mode

Operating Environment:	
Temperature:	Normal: 15℃~ 35℃, Extreme: -30℃ ~ +70℃
Humidity:	20 % ~ 75 % RH
Atmospheric Pressure:	1008 mbar
Voltage:	Nominal: 3.7Vdc
Test mode:	
LTE QPSK mode	Keep the EUT communication with simulated station in QPSK mode
Remark: The EUT has been tested under continuous transmitting mode. Channel Low, Mid and High for each type band with rated data rate were chosen for full testing.The field strength of spurious radiation emission was measured as EUT stand-up position (H mode) and lie down position (E1, E2 mode) for these modes with power adaptor, earphone and Data cable. Just the worst case position (H mode) shown in report.	

3.3 Configuration diagram of EUT

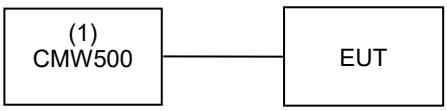

3.4 Auxiliary equipment

Device Type	Manufacturer	Model Name	Serial No.	Remark
Radio communication tester	R&S	CMW500	132429	From lab (No.BLA-EMC-044)
--	--	--	--	--

Note:

"--" mean no any auxiliary device during testing.

3.5 Test environment

Environment	Temperature	Voltage
Normal	25°C	DC 3.7V

BlueAsia

4 Laboratory information

4.1 Laboratory and accreditations

The test facility is recognized, certified, or accredited by the following organizations:

Company name:	BlueAsia of Technical Services(Shenzhen) Co., Ltd.
Address:	Building C, No. 107, Shihuan Road, Shiyan Sub-District, Baoan District, Shenzhen, Guangdong Province, China
CNAS accredited No.:	L9788
A2LA Cert. No.:	5071.01
FCC Designation No.:	CN1252
ISED CAB identifier No.:	CN0028
Telephone:	+86-755-28682673
FAX:	+86-755-28682673

4.2 Measurement uncertainty

This uncertainty represents an expanded uncertainty expressed at approximately the 95% confidence level using a coverage factor of k=1.96.

Parameter	Expanded Uncertainty
Radiated Emission(9kHz-30MHz)	±4.34dB
Radiated Emission(30Mz-1000MHz)	±4.24dB
Radiated Emission(1GHz-18GHz)	±4.68dB
AC Power Line Conducted Emission(150kHz-30MHz)	±3.45dB
Occupied Channel Bandwidth	±5 %
RF output power, conducted	±1.5 dB
Power Spectral Density, conducted	±3.0 dB
Unwanted Emissions, conducted	±3.0 dB
Temperature	±3 °C
Supply voltages	±3 %
Time	±5 %

BlueAsia

5 Test equipment

RF conducted

Equipment	Name	Model	Manufacture	S/N	Cal. Date	Due. Date
BLA-EMC-003-003	Shield room	5*3*3	SKET	N/A	2023/11/16	2025/11/15
BLA-EMC-016	Signal Generator	N5182A	Agilent	MY52420567	2024/06/28	2025/06/27
					2025/06/29	2026/06/28
BLA-EMC-038	Spectrum	N9020A	Agilent	MY49100060	2024/08/08	2025/08/07
BLA-EMC-042	Power sensor	RPR3006W	DARE	14I00889SN042	2024/08/08	2025/08/07
BLA-EMC-044	Radio communication tester	CMW500	R&S	132429	2024/08/08	2025/08/07
BLA-EMC-064	Signal Generator	N5182B	KEYSIGHT	MY58108892	2024/06/28	2025/06/27
					2025/06/29	2026/06/28
BLA-EMC-079	Spectrum	N9020A	Agilent	MY54420161	2024/08/08	2025/08/07
BLA-EMC-088	Audio Analyzer	ATS-1	Audio Precision	ATS141094	2024/06/28	2025/06/27

Radiated Spurious Emissions (Below 1GHz)

Equipment	Name	Model	Manufacture	S/N	Cal. Date	Due. Date
BLA-EMC-002-01	Anechoic chamber	9*6*6 chamber	SKET	N/A	2024/3/27	2027/3/26
BLA-EMC-002-02	Control room	966 control room	SKET	N/A	2024/3/27	2027/3/26
BLA-EMC-009	EMI receiver	ESR7	R&S	101199	2024/08/08	2025/08/07
BLA-EMC-043	Loop antenna	FMZB1519B	Schwarzbeck	00102	2024/06/29	2026/06/28
BLA-EMC-065	Broadband antenna	VULB9168	Schwarzbeck	01065P	2024/06/29	2026/06/27
BLA-XC-01	Coaxial Cable	N/A	BlueAsia	V01	N/A	N/A
BLA-XC-02	Coaxial Cable	N/A	BlueAsia	V02	N/A	N/A

Radiated Spurious Emissions (Above 1GHz)

Equipment	Name	Model	Manufacture	S/N	Cal. Date	Due. Date
BLA-EMC-001-01	Anechoic chamber	9*6*6 chamber	SKET	N/A	2023/11/16	2026/11/15
BLA-EMC-001-02	Control Room	966 control room	SKET	N/A	2023/11/16	2025/11/15
BLA-EMC-008	Spectrum	FSP40	R&S	100817	2024/08/08	2025/08/07
BLA-EMC-012	Broadband antenna	VULB9168	Schwarzbeck	00836 P:00227	2022/10/12	2025/10/11
BLA-EMC-013	Horn Antenna	BBHA9120 D	Schwarzbeck	01892	2024/06/29	2026/06/28
BLA-EMC-014	Amplifier	PA_000318 G-45	SKET	PA2018043003	2024/08/08	2025/08/07
BLA-EMC-044	Radio communication tester	CMW500	R&S	132429	2024/08/08	2025/08/07
BLA-EMC-046	Filter bank	2.4G/5G Filter bank	SKET	N/A	2024/06/28	2025/06/27
					2025/06/29	2026/06/28
BLA-EMC-061	Receiver	ESPI7	R&S	101477	2024/06/28	2025/06/27
					2025/06/29	2026/06/28
BLA-EMC-066	Amplifier	LNPA_30M 01G-30	SKET	SK2021060801	2024/06/28	2025/06/27
					2025/06/29	2026/06/28

BLA-EMC-086	Amplifier	LNPA_18G 40G-50dB	SKET	SK20220 71301	2024/06/28	2025/06/27
					2025/06/29	2026/06/28
BLA-EMC-087	Horn Antenna	BBHA 9170	Schwarzbeck	1106	2024/06/29	2026/06/28
BLA-XC-03	Coaxial Cable	N/A	BlueAsia	V03	N/A	N/A
BLA-XC-04	Coaxial Cable	N/A	BlueAsia	V04	N/A	N/A

Test Software Record：

Software No.	Software Name	Manufacture	Software version	Test site
BLA-EMC-S001	EZ-EMC	EZ	EEMC-3A1+	RE
BLA-EMC-S010	MTS 8310	MW	2.0.0.0	RF
BLA-EMC-S014	Bluetooth and WiFi Test System	Tonscend	2.5.77.0418	RF

BlueAsia

6 Test results

6.1 Conducted Output Power

Test Requirement:	Part 22.913(a)(2), Part 27.50(d)(4),
Test Method:	ANSI/TIA-603-E 2016
Limit:	Band2: 2W; Band4/Band66:1W; Band5/Band 12/Band13:7W;
Test Setup:	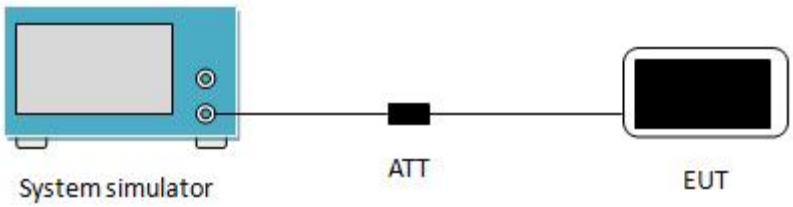
Test Procedure:	The transmitter output was connected to a calibrated attenuator, the other end of which was connected to the CMW500. Transmitter output power was read off in dBm.
Test Instruments:	Refer to section 5 for details
Test mode:	Refer to section 3.1 for details
Test results:	Passed

Measurement Data:

Please Refer To Appendix 1: LTE RF Test data section 1.5

BlueAsia

6.2 Peak-to-Average Ratio

Test Requirement:	Part 24.232 (d), Part 27.50(d)(5)
Test Method:	ANSI/TIA-603-E 2016
Limit:	The peak-to-average ratio (PAR) of the transmission may not exceed 13 dB.
Test Setup:	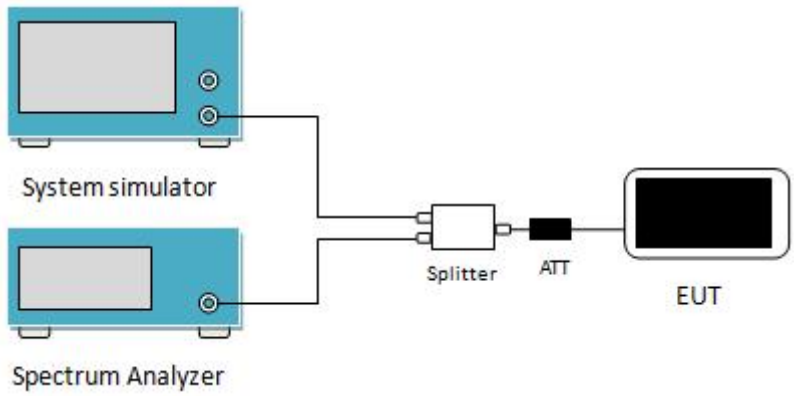
Test Procedure:	1 The RF output of the transceiver was connected to a spectrum analyzer through appropriate attenuation. 2 Set the CCDF option in spectrum analyzer, RBW ≥ OBW, 3 Set the EUT working in highest power level, measured and recorded the 0.1% as PAPR level. 4 Repeat step 1~3 at other frequency and modulations.
Test Instruments:	Refer to section 5 for details
Test mode:	Refer to section 3.1 for details
Test results:	Passed

Measurement Data:

Please Refer To Appendix 1: LTE RF Test data section 1.6

6.3 Occupy Bandwidth

Test Requirement:	Part 22.917(b), Part 27.53(h)
Test Method:	ANSI/TIA-603-E 2016
Test Setup:	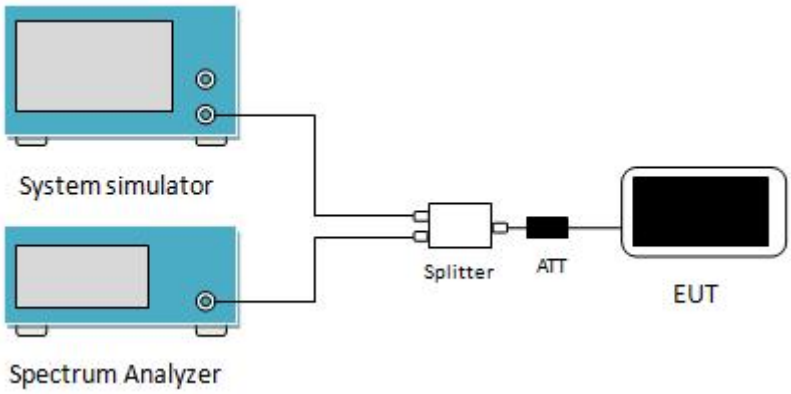
Test Procedure:	1. The EUT's output RF connector was connected with a short cable to the spectrum analyzer 2. RBW was set to about 1% ~ 5% of emission BW, VBW= 3 times RBW. 3. -26dBc display line was placed on the screen (or 99% bandwidth), the occupied bandwidth is the delta frequency between the two points where the display line intersects the signal trace.
Test Instruments:	Refer to section 5 for details
Test mode:	Refer to section 3.1 for details
Test results:	Passed

Measurement Data:

Please Refer To Appendix 1: LTE RF Test data section 1.1

6.4 Out of band emission at antenna terminals,Band Edge

Test Requirement:	Part 24.238 (a), part 27.53(h)
Test Method:	ANSI/TIA-603-E 2016
Limit:	LTE Band4: Thepower of any emission outside a licensee's frequency block shall be attenuated below the transmitter power (P) in watts by at least 43 + 10 $\log_{10}$(P) dB (-13 dBm). frequencies between 5 megahertz and Xmegahertz from the channel edge, and 55 + 10 log (P) dB on all frequencies more than X megahertz from the channel edge,where X is the greater of 6 megahertz or the actual emissionbandwidth as defined in paragraph (m)(6) of this section. Inaddition, the attenuation factor shall not be less that 43 + 10 log (P) dB on allfrequencies between 2490.5 MHz and 2496 MHzand 55 + 10 log (P) dB at or below 2490.5 MHz.
Test Setup:	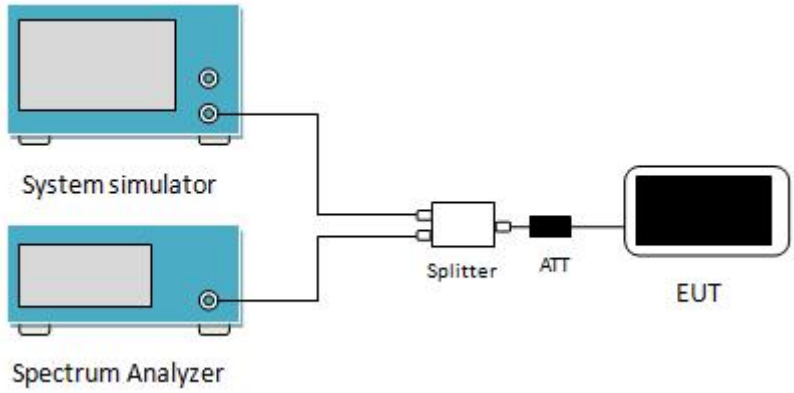
Test Procedure:	1 The RF output of the transceiver was connected to a spectrum analyzer through appropriate attenuation. 2 The resolution bandwidth of the spectrum analyzer was set at 100 kHz when below 1GHz, 1MHz when above 1 GHz; sufficient scans were taken to show the out of band Emissions if any up to 10th harmonic. 3 For the out of band: Set the RBW=100 kHz, VBW=300 kHz when below 1 GHz, RBW =1 MHz, VBW=3 MHz when above 1 GHz, Start=30MHz, Stop= 10th harmonic. 4 Band Edge Requirements: In the 1 MHz bands immediately outside and adjacent to the frequency block, a resolution bandwidth of at least 1 percent of the emission bandwidth of the fundamental emission of the transmitter may be employed to measure the out of band Emissions.
Test Instruments:	Refer to section 5 for details
Test mode:	Refer to section 3.1 for details
Test results:	Passed

Measurement Data:

Please Refer To Appendix 1: LTE RF Test data section 1.3

6.5 ERP, EIRP Measurement

Test Requirement:	Part 22.913(a)(2), Part 27.50 (h)
Test Method:	ANSI/TIA-603-E 2016
Limit:	Band2: 2W; Band4/Band66:1W; Band5: 7W; Band 12/Band13:30W;
Test setup:	Below 1GHz 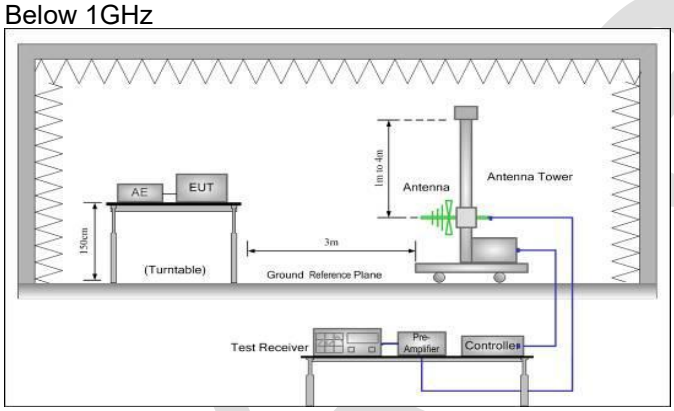 Above 1GHz 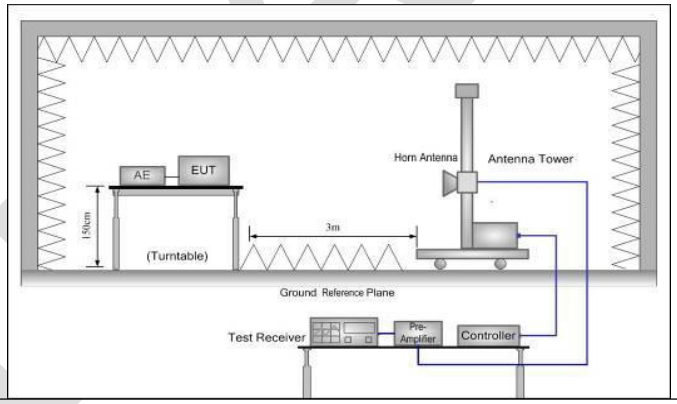
Test Procedure:	1. The EUT was placed on an non-conductive turntable using a non-conductive support. The radiated emission at the fundamental frequency was measured at 3 m with a test antenna and EMI spectrum analyzer. 2. During the measurement, the EUT was communication with the station. The highest emission was recorded with the rotation of the turntable and the lowering of the test antenna from 4m to 1m. The reading was recorded and the field strength (E in dBuV/m) was calculated. 3. ERP in frequency band below 1GHz were measured using a substitution method. The EUT was replaced by dipole antenna connected, the S.G. output was recorded and ERP was calculated as follows: ERP = S.G. output (dBm) + Antenna Gain (dBd) – Cable Loss (dB) 4. EIRP in frequency band above 1GHz were measured using a substitution method. The EUT was replaced by or horn antenna connected, the S.G. output was recorded and EIRP was calculated as follows: EIRP = S.G. output (dBm) + Antenna Gain (dBi) – Cable Loss (dB)

	5. The worse case was relating to the conducted output power.
Test Instruments:	Refer to section 5 for details
Test mode:	Refer to section 3.1 for details
Test results:	Passed

BlueAsia

Measurement Data:

LTE Band 2

Frequency (MHz)	UL Channel	Modulation	BW (MHz)	EUT Pol.	Antenna Pol.	EIRP(dBm)	Limit (dBm)	Result
LowestChannel								
1850.70	18607	QPSK	1.4	H	V	25.66	33.00	Pass
					H	25.68		
Middle Channel								
1880.00	18900	QPSK	1.4	H	V	25.79	33.00	Pass
					H	25.66		
Highest Channel								
1909.30	19193	QPSK	1.4	H	V	25.68	33.00	Pass
					H	25.74		

Frequency (MHz)	UL Channel	Modulation	BW (MHz)	EUT Pol.	Antenna Pol.	EIRP(dBm)	Limit (dBm)	Result
LowestChannel								
1851.50	18615	QPSK	3	H	V	24.65	33.00	Pass
					H	24.54		
Middle Channel								
1880.00	18900	QPSK	3	H	V	24.53	33.00	Pass
					H	24.75		
Highest Channel								
1908.50	19185	QPSK	3	H	V	24.74	33.00	Pass
					H	24.91		

BlueAsia

Frequency (MHz)	UL Channel	Modulation	BW (MHz)	EUT Pol.	Antenna Pol.	EIRP(dBm)	Limit (dBm)	Result
LowestChannel								
1852.50	18625	QPSK	5	H	V	24.62	33.00	Pass
					H	24.93		
Middle Channel								
1880.00	18900	QPSK	5	H	V	24.93	30.00	Pass
					H	24.89		
Highest Channel								
1907.50	19175	QPSK	5	H	V	24.72	33.00	Pass
					H	24.94		

Frequency (MHz)	UL Channel	Modulation	BW (MHz)	EUT Pol.	Antenna Pol.	EIRP(dBm)	Limit (dBm)	Result
LowestChannel								
1855.00	18650	QPSK	10	H	V	25.17	30.00	Pass
					H	24.85		
Middle Channel								
1880.00	18900	QPSK	10	H	V	24.82	33.00	Pass
					H	25.15		
Highest Channel								
1905.00	19150	QPSK	10	H	V	24.76	33.00	Pass
					H	25.07		

BlueAsia

Frequency (MHz)	UL Channel	Modulation	BW (MHz)	EUT Pol.	Antenna Pol.	EIRP(dBm)	Limit (dBm)	Result
LowestChannel								
1857.50	18675	QPSK	15	H	V	24.92	33.00	Pass
					H	24.71		
Middle Channel								
1880.00	18900	QPSK	15	H	V	25.14	33.00	Pass
					H	25.02		
Highest Channel								
1902.50	19125	QPSK	15	H	V	24.82	33.00	Pass
					H	24.92		

Frequency (MHz)	UL Channel	Modulation	BW (MHz)	EUT Pol.	Antenna Pol.	EIRP(dBm)	Limit (dBm)	Result
LowestChannel								
1860.00	18700	QPSK	20	H	V	24.73	33.00	Pass
					H	25.02		
Middle Channel								
1880.00	18900	QPSK	20	H	V	24.92	33.00	Pass
					H	25.13		
Highest Channel								
1900.00	19100	QPSK	20	H	V	24.98	33.00	Pass
					H	25.14		

BlueAsia

LTE Band 4

Frequency (MHz)	UL Channel	Modulation	BW (MHz)	EUT Pol.	Antenna Pol.	EIRP(dBm)	Limit (dBm)	Result
LowestChannel								
1710.70	19957	QPSK	1.4	H	V	23.78	30.00	Pass
					H	23.81		
Middle Channel								
1732.50	20175	QPSK	1.4	H	V	24.15	30.00	Pass
					H	23.95		
Highest Channel								
1754.30	20393	QPSK	1.4	H	V	23.87	30.00	Pass
					H	24.01		

Frequency (MHz)	UL Channel	Modulation	BW (MHz)	EUT Pol.	Antenna Pol.	EIRP(dBm)	Limit (dBm)	Result
LowestChannel								
1711.50	19965	QPSK	3	H	V	23.81	30.00	Pass
					H	23.97		
Middle Channel								
1732.50	20175	QPSK	3	H	V	24.15	30.00	Pass
					H	24.07		
Highest Channel								
1753.50	20385	QPSK	3	H	V	24.18	30.00	Pass
					H	23.9		

BlueAsia

Frequency (MHz)	UL Channel	Modulation	BW (MHz)	EUT Pol.	Antenna Pol.	EIRP(dBm)	Limit (dBm)	Result
LowestChannel								
1712.50	19975	QPSK	5	H	V	24.03	30.00	Pass
					H	23.79		
Middle Channel								
1732.50	20175	QPSK	5	H	V	23.86	30.00	Pass
					H	24.07		
Highest Channel								
1752.50	20375	QPSK	5	H	V	23.93	30.00	Pass
					H	24.07		

Frequency (MHz)	UL Channel	Modulation	BW (MHz)	EUT Pol.	Antenna Pol.	EIRP(dBm)	Limit (dBm)	Result
LowestChannel								
1715.00	2000	QPSK	10	H	V	23.85	30.00	Pass
					H	24.01		
Middle Channel								
1732.50	20175	QPSK	10	H	V	23.97	30.00	Pass
					H	24.17		
Highest Channel								
1750.00	20350	QPSK	10	H	V	23.71	30.00	Pass
					H	23.79		

BlueAsia

Frequency (MHz)	UL Channel	Modulation	BW (MHz)	EUT Pol.	Antenna Pol.	EIRP(dBm)	Limit (dBm)	Result
LowestChannel								
1717.50	20025	QPSK	15	H	V	23.82	30.00	Pass
					H	23.8		
Middle Channel								
1732.50	20175	QPSK	15	H	V	23.84	30.00	Pass
					H	23.87		
Highest Channel								
1747.50	20325	QPSK	15	H	V	23.84	30.00	Pass
					H	24.09		

Frequency (MHz)	UL Channel	Modulation	BW (MHz)	EUT Pol.	Antenna Pol.	EIRP(dBm)	Limit (dBm)	Result
LowestChannel								
1720.00	20050	QPSK	20	H	V	24.17	30.00	Pass
					H	24.02		
Middle Channel								
1732.50	20175	QPSK	20	H	V	23.95	30.00	Pass
					H	24.17		
Highest Channel								
1745.00	20300	QPSK	20	H	V	22.99	30.00	Pass
					H	23.15		

BlueAsia

LTE Band 5

Frequency (MHz)	UL Channel	Modulation	BW (MHz)	EUT Pol.	Antenna Pol.	ERP(dBm)	Limit (dBm)	Result
LowestChannel								
824.7	20407	QPSK	1.4	H	V	21.18	38.45	Pass
					H	21.06		
Middle Channel								
836.5	20525	QPSK	1.4	H	V	20.79	38.45	Pass
					H	20.74		
Highest Channel								
848.3	20643	QPSK	1.4	H	V	21.15	38.45	Pass
					H	21.08		

Frequency (MHz)	UL Channel	Modulation	BW (MHz)	EUT Pol.	Antenna Pol.	ERP(dBm)	Limit (dBm)	Result
LowestChannel								
825.5	20415	QPSK	3	H	V	20.92	38.45	Pass
					H	20.78		
Middle Channel								
836.5	20525	QPSK	3	H	V	20.79	38.45	Pass
					H	20.84		
Highest Channel								
847.5	20635	QPSK	3	H	V	20.76	38.45	Pass
					H	20.8		

BlueAsia

Frequency (MHz)	UL Channel	Modulation	BW (MHz)	EUT Pol.	Antenna Pol.	ERP(dBm)	Limit (dBm)	Result
LowestChannel								
826.5	24025	QPSK	5	H	V	21.77	38.45	Pass
					H	22.08		
Middle Channel								
836.5	20525	QPSK	5	H	V	20.7	38.45	Pass
					H	20.86		
Highest Channel								
846.5	20625	QPSK	5	H	V	20.84	38.45	Pass
					H	21.01		

Frequency (MHz)	UL Channel	Modulation	BW (MHz)	EUT Pol.	Antenna Pol.	ERP(dBm)	Limit (dBm)	Result
LowestChannel								
829	20450	QPSK	10	H	V	21.81	38.45	Pass
					H	21.74		
Middle Channel								
836.5	20525	QPSK	10	H	V	21.78	38.45	Pass
					H	21.82		
Highest Channel								
844	20600	QPSK	10	H	V	21.06	38.45	Pass
					H	21.01		

BlueAsia

LTE Band 12

Frequency (MHz)	UL Channel	Modulation	BW (MHz)	EUT Pol.	Antenna Pol.	ERP(dBm)	Limit (dBm)	Result
Lowest Channel								
699.7	23017	QPSK	1.4	H	V	20.84	44.77	Pass
					H	20.98		
Middle Channel								
707.5	23095	QPSK	1.4	H	V	20.73	44.77	Pass
					H	21.16		
Highest Channel								
715.3	23173	QPSK	1.4	H	V	20.87	44.77	Pass
					H	20.86		

Frequency (MHz)	UL Channel	Modulation	BW (MHz)	EUT Pol.	Antenna Pol.	ERP(dBm)	Limit (dBm)	Result
Lowest Channel								
700.5	23025	QPSK	3	H	V	20.86	44.77	Pass
					H	21.04		
Middle Channel								
707.5	23095	QPSK	3	H	V	21.14	44.77	Pass
					H	20.79		
Highest Channel								
714.0	23165	QPSK	3	H	V	21.07	44.77	Pass
					H	21.02		

BlueAsia

Frequency (MHz)	UL Channel	Modulation	BW (MHz)	EUT Pol.	Antenna Pol.	ERP(dBm)	Limit (dBm)	Result
LowestChannel								
779.5	23205	QPSK	5	H	V	20.73	44.77	Pass
					H	20.86		
Middle Channel								
707.5	23095	QPSK	5	H	V	21.07	44.77	Pass
					H	20.71		
Highest Channel								
713.5	23155	QPSK	5	H	V	21.09	44.77	Pass
					H	21.34		

Frequency (MHz)	UL Channel	Modulation	BW (MHz)	EUT Pol.	Antenna Pol.	ERP(dBm)	Limit (dBm)	Result
LowestChannel								
704	23060	QPSK	10	H	V	20.83	44.77	Pass
					H	21.12		
Middle Channel								
707.5	23095	QPSK	10	H	V	20.99	44.77	Pass
					H	20.86		
Highest Channel								
711	23130	QPSK	10	H	V	21.24	44.77	Pass
					H	21.17		

BlueAsia

LTE Band 13

Frequency (MHz)	UL Channel	Modulation	BW (MHz)	EUT Pol.	Antenna Pol.	ERP(dBm)	Limit (dBm)	Result
Lowest Channel								
779.5	23205	QPSK	5	H	V	20.59	44.77	Pass
					H	20.6		
Middle Channel								
782	23230	QPSK	5	H	V	20.95	44.77	Pass
					H	20.68		
Highest Channel								
784.5	23255	QPSK	5	H	V	20.63	44.77	Pass
					H	20.9		

Frequency (MHz)	UL Channel	Modulation	BW (MHz)	EUT Pol.	Antenna Pol.	ERP(dBm)	Limit (dBm)	Result
Middle Channel								
782	23230	QPSK	10	H	V	20.52	44.77	Pass
					H	20.73		

BlueAsia

LTE Band 66

Frequency (MHz)	UL Channel	Modulation	BW (MHz)	EUT Pol.	Antenna Pol.	EIRP(dBm)	Limit (dBm)	Result
Lowest Channel								
1710.7	131979	QPSK	1.4	H	V	24.74	30.00	Pass
					H	24.78		
Middle Channel								
1745	132322	QPSK	1.4	H	V	24.8	30.00	Pass
					H	24.73		
Highest Channel								
1779.3	132665	QPSK	1.4	H	V	24.84	30.00	Pass
					H	24.8		

Frequency (MHz)	UL Channel	Modulation	BW (MHz)	EUT Pol.	Antenna Pol.	EIRP(dBm)	Limit (dBm)	Result
Lowest Channel								
1711.5	131987	QPSK	3	H	V	24.5	30.00	Pass
					H	24.77		
Middle Channel								
1745	132322	QPSK	3	H	V	24.65	30.00	Pass
					H	24.79		
Highest Channel								
1778.5	132657	QPSK	3	H	V	24.63	30.00	Pass
					H	24.97		

BlueAsia

Frequency (MHz)	UL Channel	Modulation	BW (MHz)	EUT Pol.	Antenna Pol.	EIRP(dBm)	Limit (dBm)	Result
LowestChannel								
1712.5	131997	QPSK	5	H	V	24.95	30.00	Pass
					H	24.82		
Middle Channel								
1745	132322	QPSK	5	H	V	24.82	30.00	Pass
					H	24.97		
Highest Channel								
1777.5	132647	QPSK	5	H	V	24.95	30.00	Pass
					H	24.71		

Frequency (MHz)	UL Channel	Modulation	BW (MHz)	EUT Pol.	Antenna Pol.	EIRP(dBm)	Limit (dBm)	Result
LowestChannel								
1715	132022	QPSK	10	H	V	24.51	30.00	Pass
					H	24.52		
Middle Channel								
1745	132322	QPSK	10	H	V	24.73	30.00	Pass
					H	24.78		
Highest Channel								
1775	132622	QPSK	10	H	V	24.76	30.00	Pass
					H	24.96		

BlueAsia

Frequency (MHz)	UL Channel	Modulation	BW (MHz)	EUT Pol.	Antenna Pol.	EIRP(dBm)	Limit (dBm)	Result
LowestChannel								
1717.5	132047	QPSK	15	H	V	24.81	30.00	Pass
					H	24.6		
Middle Channel								
1745	132322	QPSK	15	H	V	24.99	30.00	Pass
					H	24.51		
Highest Channel								
1772.5	132597	QPSK	15	H	V	24.89	30.00	Pass
					H	24.67		

Frequency (MHz)	UL Channel	Modulation	BW (MHz)	EUT Pol.	Antenna Pol.	EIRP(dBm)	Limit (dBm)	Result
LowestChannel								
1720	132072	QPSK	20	H	V	24.64	30.00	Pass
					H	24.89		
Middle Channel								
1745	132322	QPSK	20	H	V	24.74	30.00	Pass
					H	24.77		
Highest Channel								
1770	132572	QPSK	20	H	V	24.92	30.00	Pass
					H	24.64		

BlueAsia

6.6 Spurious Emissions at Antenna Terminal

Test Requirement:	Part 24.238 (a),Part 27.53(h)
Test Method:	ANSI/TIA-603-E 2016
Limit:	LTE Band 2/4/5/12/13/66: <-13dBm,
Test setup:	Below 1GHz 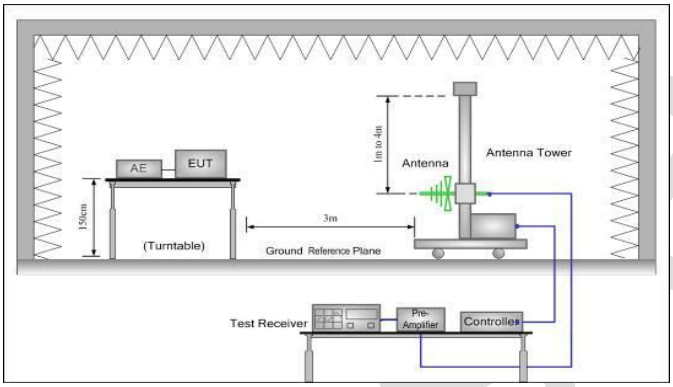 Above 1GHz 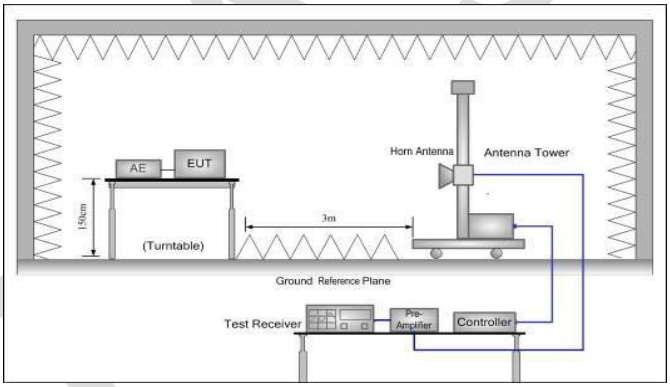
Test Procedure:	1. The EUT was placed on an non-conductive turntable using a non-conductive support. The radiated emission at the fundamental frequency was measured at 3 m with a test antenna and EMI spectrum analyzer. 2. During the tests, the antenna height and the EUT azimuth were varied in order to identify the maximum level of emissions from the EUT. This maximization process was repeated with the EUT positioned in each of its three orthogonal orientations. 3. The frequency range up to tenth harmonic was investigated for each of three fundamental frequency (low, middle and high channels). Once spurious emission was identified, the power of the emission was determined using the substitution method. 4. The spurious emissions attenuation was calculated as the difference between radiated power at the fundamental frequency and the spurious emissions frequency. ERP / EIRP = S.G. output (dBm) + Antenna Gain(dB/dBi) – Cable Loss (dB)
Test Instruments:	Refer to section 5 for details
Test mode:	Refer to section 3.1 for details

Test results:	Passed

BlueAsia

Measurement Data:

LTE Band 2 / 1.4 MHz / RB size 1 & RB offset 0				
Frequency (MHz)	Spurious Emission		Limit (dBm)	Result
	Polarization	Level (dBm)		
Lowest				
2701.4	Vertical	-43.05	-13.00	Pass
5552.1	V	-42.06		
2701.4	Horizontal	-42.32		
5552.1	H	-42.14		
Middle				
3760	Vertical	-43.22	-13.00	Pass
5640	V	-43.39		
3760	Horizontal	-42.31		
5640	H	-42.37		
Highest				
3818.6	Vertical	-43.12	-13.00	Pass
5727.9	V	-43.15		
3818.6	Horizontal	-42.09		
5727.9	H	-42.01		

Note:
1. The emission levels of below 1 GHz are 20 dB lower than the limit so not show in this report.
2. For above 1 GHz, all test modes were performed, and just the worst case shown in the report.

LTE Band 2 / 20 MHz / RB size 1 & RB offset 0				
Frequency (MHz)	Spurious Emission		Limit (dBm)	Result
	Polarization	Level (dBm)		
Lowest				
3720	Vertical	-43.06	-13.00	Pass
5580	V	-42.23		
3720	Horizontal	-42.06		
5580	H	-41.47		
Middle				
3760	Vertical	-43.19	-13.00	Pass
5640	V	-42.12		
3760	Horizontal	-42.46		
5640	H	-42.19		
Highest				
3800	Vertical	-41.26	-13.00	Pass
5700	V	-42.49		
3800	Horizontal	-42.33		
5700	H	-42.3		

Note:
1. The emission levels of below 1 GHz are 20 dB lower than the limit so not show in this report.
2. For above 1 GHz, all test modes were performed, and just the worst case shown in the report.

LTE Band 4 / 1.4 MHz / RB size 1 & RB offset 0				
Frequency (MHz)	Spurious Emission		Limit (dBm)	Result
	Polarization	Level (dBm)		
Lowest				
3421.40	Vertical	-43.08	-13.00	Pass
5132.10	V	-42.32		
3421.40	Horizontal	-42.3		
5132.10	H	-42.07		
Middle				
3465.00	Vertical	-43.22	-13.00	Pass
5197.50	V	-41.18		
3465.00	Horizontal	-42.35		
5197.50	H	-42.29		
Highest				
3508.60	Vertical	-43.31	-13.00	Pass
5262.90	V	-42.17		
3508.60	Horizontal	-42.01		
5262.90	H	-43.33		

Note:
1. The emission levels of below 1 GHz are 20 dB lower than the limit so not show in this report.
2. For above 1 GHz, all test modes were performed, and just the worst case shown in the report.

LTE Band 4 / 20 MHz / RB size 1 & RB offset 0				
Frequency (MHz)	Spurious Emission		Limit (dBm)	Result
	Polarization	Level (dBm)		
Lowest				
3440.00	Vertical	-42.02	-13.00	Pass
5160.00	V	-42.01		
3440.00	Horizontal	-42.2		
5160.00	H	-42.47		
Middle				
3465.00	Vertical	-43.24	-13.00	Pass
5197.50	V	-42.11		
3465.00	Horizontal	-42.43		
5197.50	H	-42.33		
Highest				
3490.00	Vertical	-42.17	-13.00	Pass
5235.00	V	-42.01		
3490.00	Horizontal	-41.26		
5235.00	H	-42.16		

Note:
1. The emission levels of below 1 GHz are 20 dB lower than the limit so not show in this report.
2. For above 1 GHz, all test modes were performed, and just the worst case shown in the report.

LTE Band 5/ 1.4 MHz / RB size 1 & RB offset 0				
Frequency (MHz)	Spurious Emission		Limit (dBm)	Result
	Polarization	Level (dBm)		
Lowest				
1649.7	Vertical	-42.25	-13.00	Pass
2474.1	V	-42.05		
1649.7	Horizontal	-40.13		
2474.1	H	-42.36		
Middle				
1673.0	Vertical	-42.44	-13.00	Pass
2509.5	V	-42.06		
1673.0	Horizontal	-41.45		
2509.5	H	-41.41		
Highest				
1696.6	Vertical	-43.37	-13.00	Pass
2544.9	V	-42.14		
1696.6	Horizontal	-42.03		
2544.9	H	-42.27		

Note:
1. The emission levels of below 1 GHz are 20 dB lower than the limit so not show in this report.
2. For above 1 GHz, all test modes were performed, and just the worst case shown in the report.

LTE Band 5 / 10 MHz / RB size 1 & RB offset 0				
Frequency (MHz)	Spurious Emission		Limit (dBm)	Result
	Polarization	Level (dBm)		
Lowest				
1658	Vertical	-42.35	-13.00	Pass
2487	V	-42.4		
1658	Horizontal	-41.23		
2487	H	-42.17		
Middle				
1673.0	Vertical	-42.29	-13.00	Pass
2509.5	V	-42.12		
1673.0	Horizontal	-42.43		
2509.5	H	-42.26		
Highest				
1688	Vertical	-42.47	-13.00	Pass
2532	V	-42.32		
1688	Horizontal	-43.23		
2532	H	-42.29		

Note:
1. The emission levels of below 1 GHz are 20 dB lower than the limit so not show in this report.
2. For above 1 GHz, all test modes were performed, and just the worst case shown in the report.

LTE Band 12 / 1.4 MHz / RB size 1 & RB offset 0				
Frequency (MHz)	Spurious Emission		Limit (dBm)	Result
	Polarization	Level (dBm)		
Lowest				
1399.4	Vertical	-42.29	-13.00	Pass
2099.1	V	-43.01		
1399.4	Horizontal	-42.23		
2099.1	H	-42.26		
Middle				
1415	Vertical	-42.32	-13.00	Pass
2122.5	V	-42.45		
1415	Horizontal	-42.16		
2122.5	H	-41.34		
Highest				
1430.6	Vertical	-43.24	-13.00	Pass
2145.9	V	-42.43		
1430.6	Horizontal	-43.16		
2145.9	H	-43.35		

Note:
1. The emission levels of below 1 GHz are 20 dB lower than the limit so not show in this report.
2 For above 1 GHz, all test modes were performed, and just the worst case shown in the report.

LTE Band 12 / 10 MHz / RB size 1 & RB offset 0				
Frequency (MHz)	Spurious Emission		Limit (dBm)	Result
	Polarization	Level (dBm)		
Lowest				
1408	Vertical	-42.11	-13.00	Pass
2112	V	-42.27		
1408	Horizontal	-42.12		
2112	H	-42.31		
Middle				
1415	Vertical	-41.44	-13.00	Pass
2122.5	V	-42.01		
1415	Horizontal	-42.29		
2122.5	H	-42.2		
Highest				
1422	Vertical	-42.28	-13.00	Pass
2133	V	-43.33		
1422	Horizontal	-43.33		
2133	H	-42.26		

Note:
1 The emission levels of below 1 GHz are 20 dB lower than the limit so not show in this report.
2 For above 1 GHz, all test modes were performed, and just the worst case shown in the report.

LTE Band 13 / 5 MHz / RB size 1 & RB offset 0				
Frequency (MHz)	Spurious Emission		Limit (dBm)	Result
	Polarization	Level (dBm)		
Lowest				
1559	Vertical	-42.31	-13.00	Pass
2338.5	V	-42.01		
1559	Horizontal	-41.27		
2338.5	H	-43.28		
Middle				
1564	Vertical	-40.1	-13.00	Pass
2346	V	-42.46		
1564	Horizontal	-42.35		
2346	H	-42.01		
Highest				
1569	Vertical	-43.46	-13.00	Pass
2353.5	V	-42.27		
1569	Horizontal	-43.09		
2353.5	H	-42.12		

Note:
1 The emission levels of below 1 GHz are 20 dB lower than the limit so not show in this report.
2 For above 1 GHz, all test modes were performed, and just the worst case shown in the report.

LTE Band 13 / 10 MHz / RB size 1 & RB offset 0				
Frequency (MHz)	Spurious Emission		Limit (dBm)	Result
	Polarization	Level (dBm)		
Middle				
1564	Vertical	-43.14	-13.00	Pass
2346	V	-42.13		
1564	Horizontal	-43.4		
2346	H	-42.32		

Note:
1 The emission levels of below 1 GHz are 20 dB lower than the limit so not show in this report.
2 For above 1 GHz, all test modes were performed, and just the worst case shown in the report.

LTE Band 66 / 1.4 MHz / RB size 1 & RB offset 0				
Frequency (MHz)	Spurious Emission		Limit (dBm)	Result
	Polarization	Level (dBm)		
Lowest				
3421.4	Vertical	-43.01	-13.00	Pass
5132.1	V	-42.04		
3421.4	Horizontal	-43.09		
5132.1	H	-42.27		
Middle				
3490	Vertical	-41.24	-13.00	Pass
5235	V	-42.45		
3490	Horizontal	-43.11		
5235	H	-42.48		
Highest				
3558.6	Vertical	-42.48	-13.00	Pass
5337.9	V	-42.29		
3558.6	Horizontal	-43.03		
5337.9	H	-42.27		

Note:
1 The emission levels of below 1 GHz are 20 dB lower than the limit so not show in this report.
2 For above 1 GHz, all test modes were performed, and just the worst case shown in the report.

LTE Band 66 / 20 MHz / RB size 1 & RB offset 0				
Frequency (MHz)	Spurious Emission		Limit (dBm)	Result
	Polarization	Level (dBm)		
Lowest				
3440	Vertical	-43.44	-13.00	Pass
5160	V	-42.18		
3440	Horizontal	-43.21		
5160	H	-42.13		
Middle				
3490	Vertical	-42.49	-13.00	Pass
5235	V	-42.19		
3490	Horizontal	-42.26		
5235	H	-42.24		
Highest				
3540	Vertical	-42.01	-13.00	Pass
5310	V	-41.43		
3540	Horizontal	-43.2		
5310	H	-41.18		

Note:
1 The emission levels of below 1 GHz are 20 dB lower than the limit so not show in this report.
2 For above 1 GHz, all test modes were performed, and just the worst case shown in the report.

6.7 Frequency stability V.S. Temperature measurement

Test Requirement:	Part 22.355, Part 24.235, Part 27.54, Part 2.1055(a)(1)(b)
Test Method:	ANSI/TIA-603-E 2016
Limit:	±2.5ppm
Test setup:	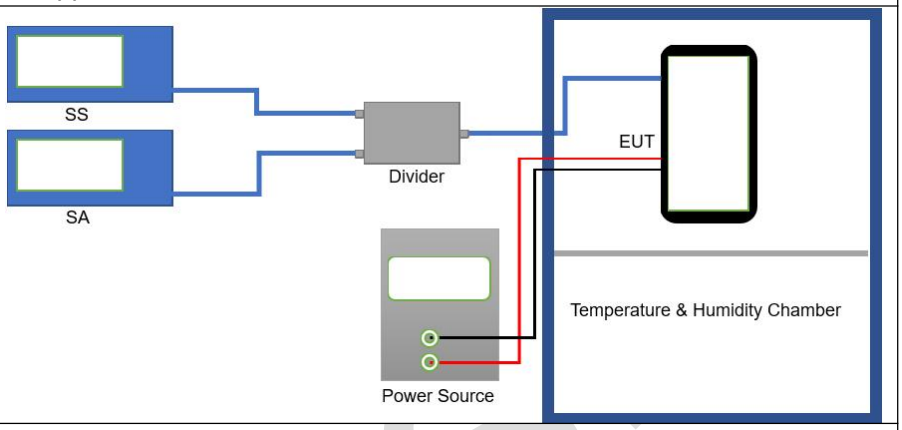
Test procedure:	1. The equipment under test was connected to an external DC power supply and input rated voltage. 2. RF output was connected to a frequency counter or spectrum analyzer via feed through attenuators. 3. The EUT was placed inside the temperature chamber. 4. Set the spectrum analyzer RBW low enough to obtain the desired frequency resolution and measure EUT 25℃ operating frequency as reference frequency. 5. Turn EUT off and set the chamber temperature to –30℃. After the temperature stabilized for approximately 30 minutes recorded the frequency. 6. Repeat step measure with 10℃ increased per stage until the highest temperature of +50℃ reached
Test Instruments:	Refer to section 5 for details
Test mode:	Refer to section 3.1 for details
Test results:	Passed

Measurement Data:

Please Refer To Appendix 1: LTE RF Test data section 1.4

6.8 Frequency stability V.S. Voltage measurement

Test Requirement:	Part 22.355, Part 24.235, Part 27.54, Part 2.1055(d)(2)
Test Method:	ANSI/TIA-603-E 2016
Limit:	±2.5ppm
Test setup:	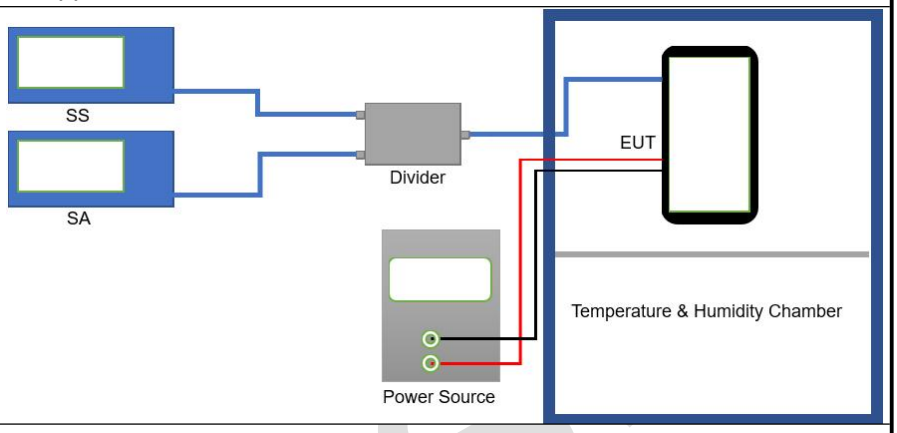
Test procedure:	1. Set chamber temperature to 25℃. Use a variable DC power source to power the EUT and set the voltage to rated voltage. 2. Set the spectrum analyzer RBW low enough to obtain the desired frequency resolution and recorded the frequency. 3. Reduce the input voltage to specify extreme voltage variation (+/-15%) and endpoint, record the maximum frequency change.
Test Instruments:	Refer to section 5 for details
Test mode:	Refer to section 3.1 for details
Test results:	Passed

Measurement Data:

Please Refer To Appendix 1: LTE RF Test data section 1.4

7 Test Setup Photo

Radiated Emissions (30MHz-1GHz)

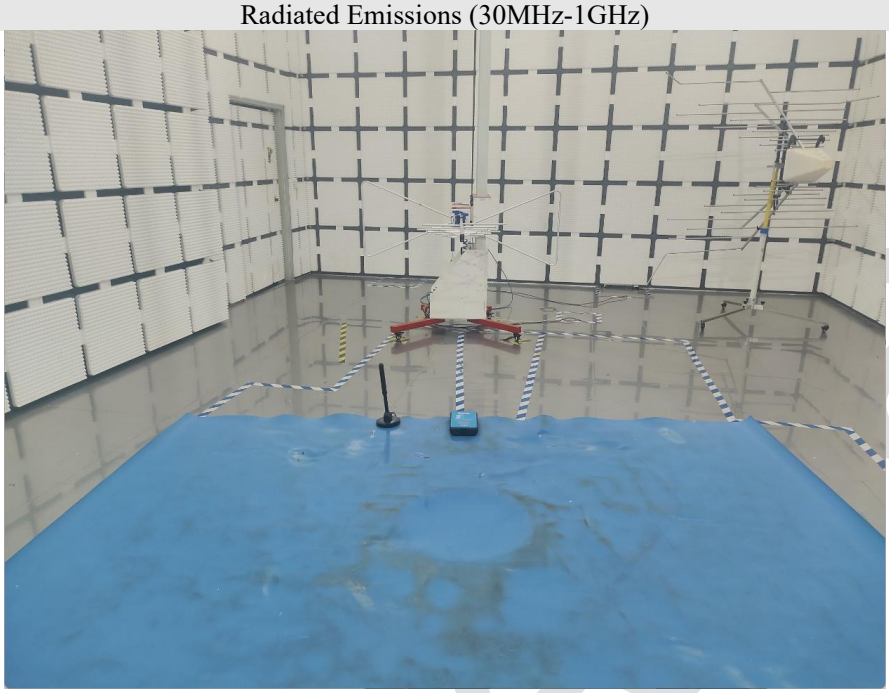

Radiated Emissions (above 1GHz)

8 EUT Constructional Details

Reference to the test report No. BLA-EMC-202503-A9101

------End of report------

The test report is effective only with both signature and specialized stamp, The result(s) shown in this report refer only to the sample(s) tested. Without written approval of BlueAsia, this report can't be reproduced except in full.

BlueAsia