Micro-gridYoulianTechnology (Chengdu)Co.,LTD

Samples Acknowledgement

catalogue:	□ Drawing □ Packaging mode		
	□ Functional / Performance Test Report □ Reliability Test Report □ RoHs Report		
Reason for sample delivery:	□ first sample delivery		
	□ Sample expired replacement □ sample loss of sample replacement □ replication sample		
Name of supplier:	Shenzhen Free Communication Technology Co., Ltd		
Supplier No.:	Z02-10486-R01	Name model:	WalmartAX3000
Customer Material Number / Version:		Mold point number:	
Supplier formulation / date	Supplier Review / Date	Customer RD Validation / Date	Customer quality confirmation / date

2024/3/7	2024/3/7		
remarks:			

ADD: 3rd floor, Building 2, Hezhou West Industrial Park, Xixiang, Baoan, Shenzhen
Email:zyx_sz@yeah.net

TEL: 86-0755-29955983 FAX: 86-0755-29955983

Acknowledgement

Customer (Customer): microgrid products (Product): 5G built-in antenna (L=160mm)

Model number (Model): WalmartAX3000

Material No. (Part Number): Z02-10486-R01

Producer (Written By): Li Wenke

Date of issue (Issued Date): 2024-03-07

Customer, CUSTOMER

engineering department	quality department	ratify
ENGINEER R&D DEPT	**QUALITY DEPT**	**APPROVED**

Free Walk

radio frequency R&D DEPT	engineering department ENGINEER R&D DEPT	ratify APPROVED
Li liberal arts	Qing Chuanghui	Deng Kai

Free WalkProprietary & Confidential © 2024Free Walk Corporation. All rightsreserved.

-

Shenzhen Free Communication Technology Co.,Ltd

Shenzhen Free Walk Communication Technology Co.LTD

Document change CV

Form Number: QR-ZYX-084
Version: A0

product model				Document change record			
order number	Change type	document number	Change date	Change the content description	Production / revision	edition	remarks

Free WalkProprietary & Confidential © 2024Free Walk Corporation. All rightsreserved.

-

catalogue

Index

1. Cover Cover (Cover) 1

2. Document Change Resume Form (Document Change Resume) 2

3. Directory (Index) 1

4. Basic parameters (The basic parameters) 1

5. Engineering Drawing (Product Drawing) 1

VI. Test Equipment (Test Equipment & Co nditions) 1

VII. Performance Test Report (Test Report) 7-10

VIII. RoHS Report List (RoHS report list) 11

IX. Packaging method (TEE PACKING WAY) 12

Free WalkProprietary & Confidential © 2024Free Walk Corporation. All rightsreserved.

–

The basic parameters

A.Electrical Characteristics	
Frequency	**5150 MHz ~5850MHz**
VSWR	≤2
Efficiency	**>60%**
Impedance	**50 Ohm**
Polarization	**Linear**
Gain	**3dBi±1**
B. Material & Mechanica l Characteristics	
Material of Radiator	
Cable Type	Φ 1.13mm Black
Connector Type	generation IPEX
Dimension	
C. Environmental	
Operation	**- 20˚C~ +60˚C**
TemperatureStorage	**- 40˚C~ +80˚C**
Temperature	

Free WalkProprietary & Confidential © 2024Free Walk Corporation. All rightsreserved.

-

序号	品名	材料/规格	颜色	数量	备注
①	PCB	FR4	黑色	1	
②	ø1.13射频线	Cu+编织带	黑色	1	
③	IPEX	第一代	金色	1	
④					

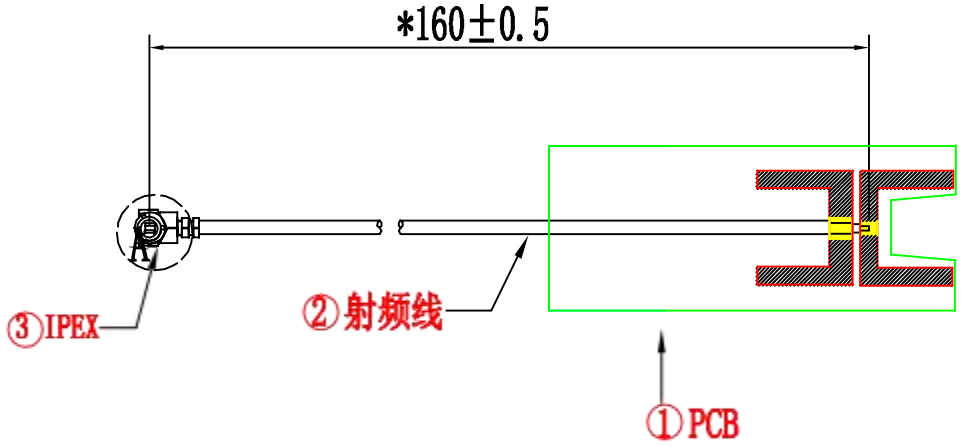

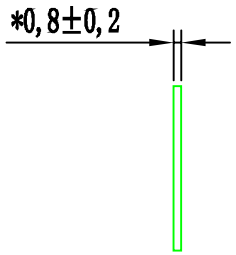

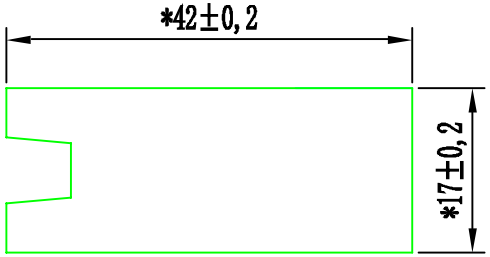

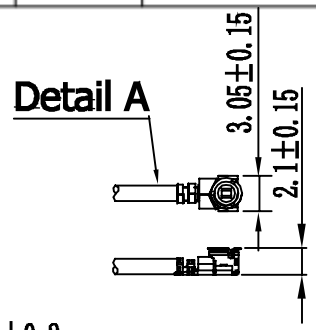

注:

1、标准*为重点尺寸,未标公差尺寸按±0.15检测
2、未标尺寸参考图纸;其它尺寸以实配为准;
3、为走线区域,为焊盘区域,为附胶区域
4、产品不能有油污、虚焊等不良现象;
5、符合ROHS

深圳自由行通信技术有限公司

第三角法				机种	WalmartAX3000	日期	2024/03/07	页码	
0~10	±0.10	○	0.02	品名	5G-内置天线	绘图		设计审核	QING
10~20	±0.15	◎	ø0.03	料号	Z02-10486-R01	审核	射频	李文科	
20~40	±0.20	⊥	0.02	客户料号					
40~	±0.25	▱	0.04	外观处理	V/A	确认			
		⌓	0.02	材质	N/A	单位	mm	比例	版本 R:A
请勿实测图纸	位置								

Test Equipment & Conditions

1. Network Analyzers:

Agilent8753D5071C

2. Communications Test Set:

Agilent 8960 CMW500

3. 3 D Chamber Test System

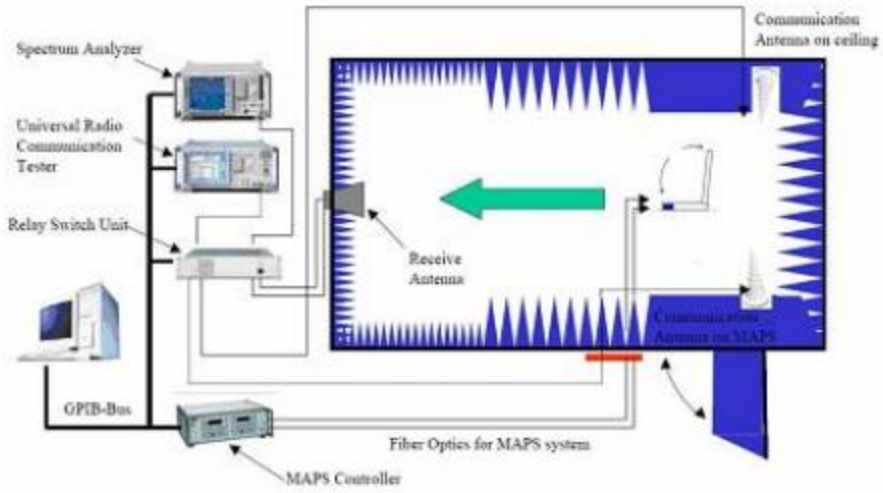

(Testing by 3D anechoic chamber)

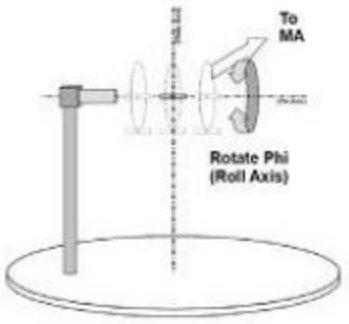

Phi axis test

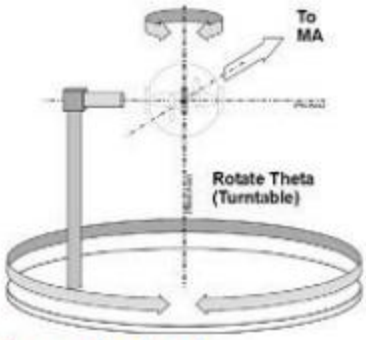

Theta axis test

Free WalkProprietary & Confidential © 2024Free Walk Corporation. All rightsreserved.

test

data

SWR

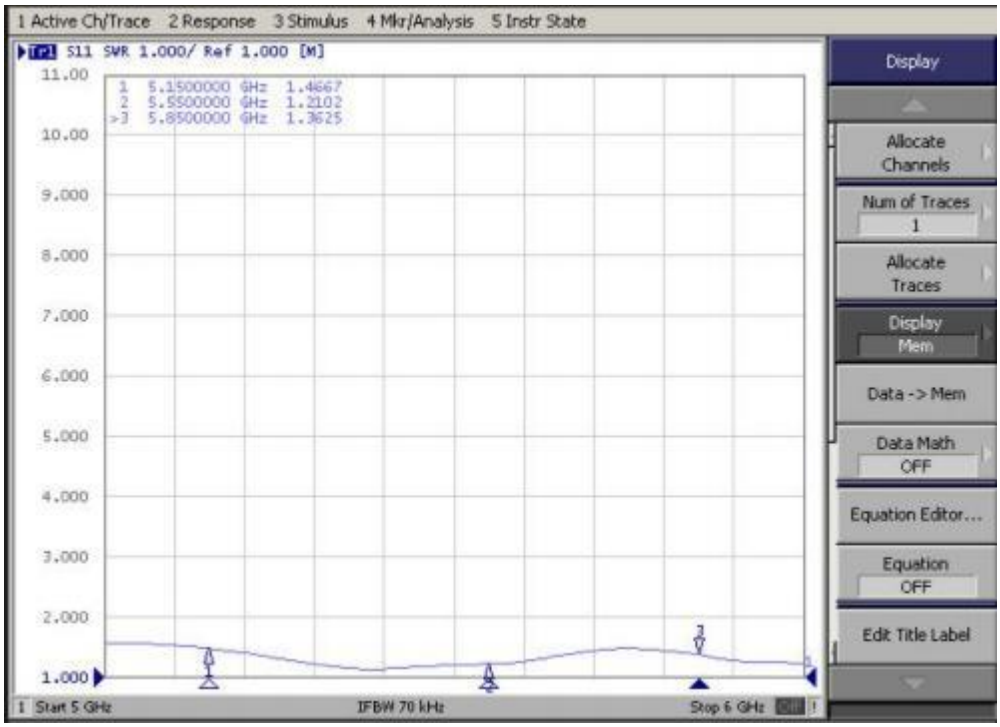

Free WalkProprietary & Confidential © 2024Free Walk Corporation. All rightsreserved.

-

Efficiency & gain:

Efficency&Gain

Freq(MHz)	Effi(%)	Gain(dBi)
5150	66.53	3.94
5200	65.85	3.82
5250	64.43	3.39
5300	68.08	3.09
5350	65.01	3.35
5400	66.99	3.07
5450	64.86	3.90
5500	69.50	3.80
5550	69.34	3.55
5600	64.71	3.51
5650	68.55	3.37
5700	66.37	3.29
5750	68.23	3.18
5800	64.42	3.82
5850	66.37	3.60

Free WalkProprietary & Confidential © 2024Free Walk Corporation. All rightsreserved.

-

directional diagram

Patten

3D graph

5150MHz

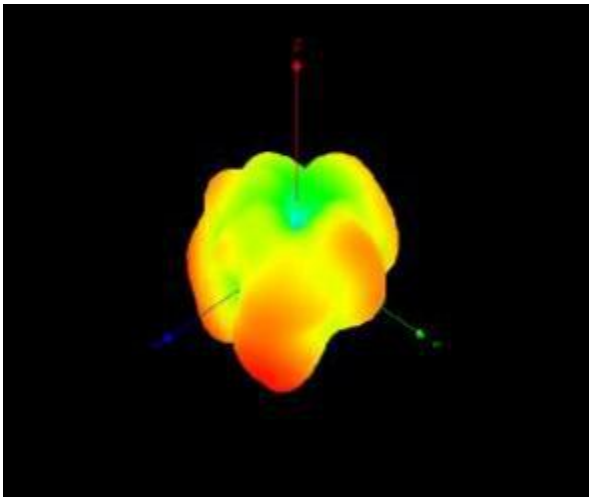

5550MHz

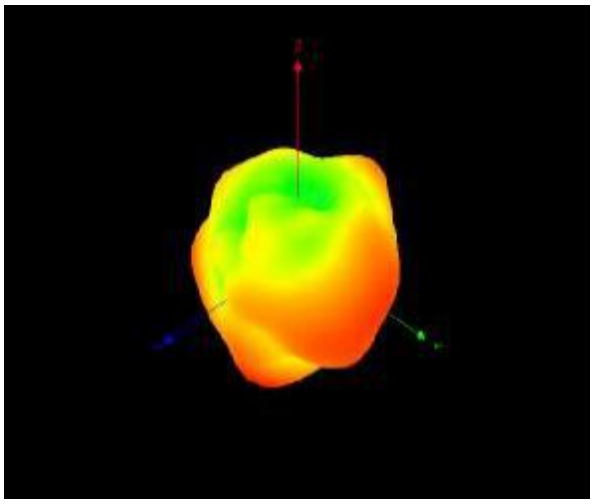

5850MHz

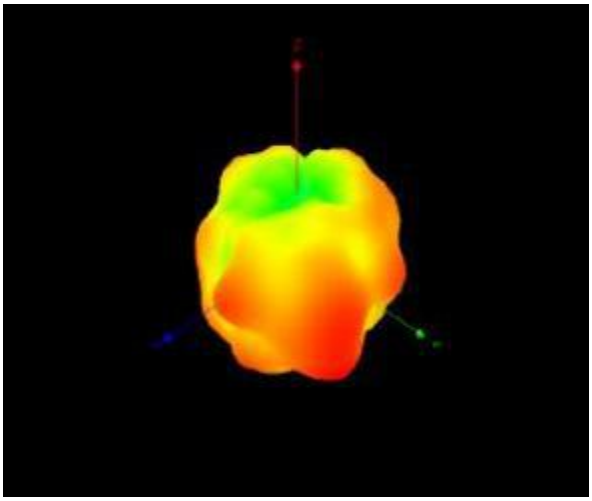

Free WalkProprietary & Confidential © 2024Free Walk Corporation. All rightsreserved.

-

2D graph

XOY surface

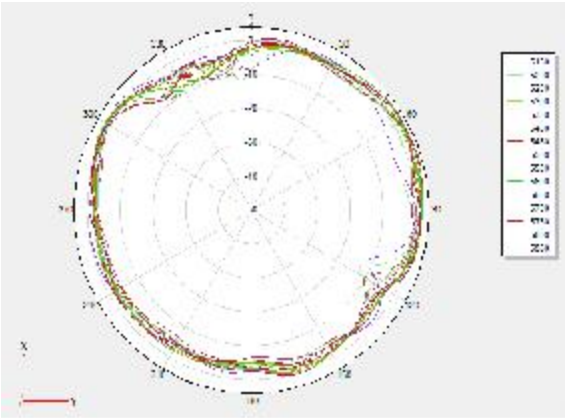

ZOX

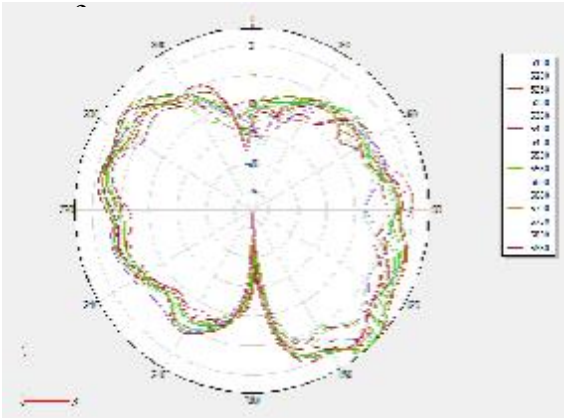

ZOY surface

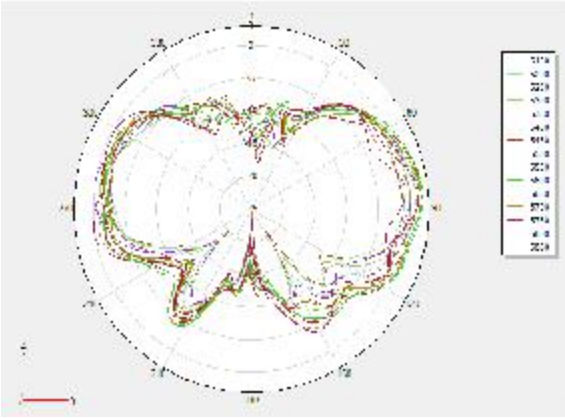

Free WalkProprietary & Confidential © 2024Free Walk Corporation. All rightsreserved.

-

ROHS report list of WIFI antenna material components of Shenzhen Free Communication Technology Co., LTD

order number	Raw material name	Raw material Suppliers (raw Manufacturer)	Testing institutions	report number	Date of detection	Detect expiration date
1	solder	TaiYuan	SGS	CANEC2302684204	2023.9.6	2024.9.6
2	tinned wird	Zhenxiong copper industry	CTI	A2230496550101001C	2023.9.26	2024.9.26
3	FR-4.0	Jin Anguo ji	SGS	CANEC23010851106	2023.10.11	2024.10.11
4	TPE	In the plastic	SGS	CANEC24002889703	2024.2.27	2025.2.27
5	H65 brass	Ningbo bowei	SGS	SHAEC23016464564	2023.10.18	2024.10.18
6	fluoroplastic FEP	Giant saint	SGS	NGBPC24000121242	2024.1.16	2025.1.16
7						

ask:

1. The report of the components must be tested by the test report of the unseparable care method and name material in accordance with the EU implementation requirements, other environmental regulations and other requirements

2. If the test report is sent, the materials must include the original components. All materials are all the packaging materials of the department, social metal and other materials do not support any form of control report, and three humor include three mixed test [illegible] ted by more than three

3. The Company recognizes the following reports provided by the following nine testing institutions, SGS [illegible] v, STS, set

4. All the test report shall be stamped on the front page with the official seal of the company. Each r[illegible] forged

此处盖公章 [illegible]cial seal

Electronic file: reports can be scanned together, or separately, but for query

产品包装规范

产品名称:天线	版本：A00
	客户特殊要求除外

一：成品天线

二：用PE袋装起来,数量以(30 50PCS)整数装以实际为准

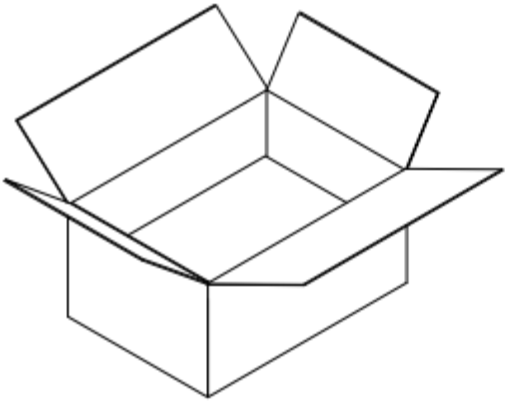

三：将装好的天线放入纸箱中(以实际数量为准)

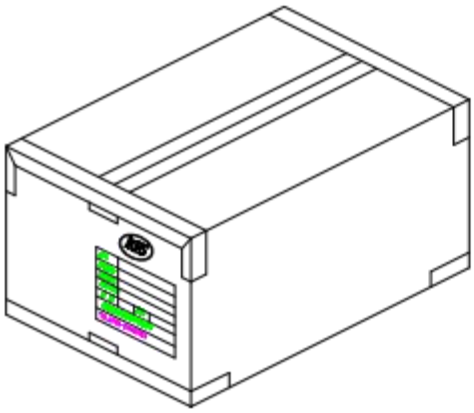

四：封箱,外箱贴我司生产标签和ROHS标签(最终以实际情况为准！)

Micro-grid Youlian Technology (Chengdu) Co., LTD

Sample acknowledgment

catalogue:	□ Drawing □ Packaging mode		
	□ Functional / Performance Test Report □ Reliability Test Report □ RoHs Report		
Reason for sample delivery:	□ first sample delivery		
	□ Sample expired replacement □ sample loss of sample replacement □ replication sample		
Name of supplier:	Shenzhen Free Bank Communication Technology Co., LTD		
Supplier No.:	Z02-10485-R01	Name model:	WalmartAX3000
Customer Material Number / Version:		Mold point number:	
Supplier formulation / date	Supplier Review / Date	Customer RD Validation / Date	Customer quality confirmation / date

2024/3/7	2024/3/7		
remarks:			

ADD: 3rd floor, Building 2, Hezhou West Industrial Park, Xixiang, Baoan, Shenzhen
Email:zyx_sz@yeah.net

TEL: 86-0755-29955983 FAX: 86-0755-29955983

Acknowledgement

Customer (Customer): microgrid product (Product): 5G built-in antenna (L=90mm)

Model number (Model): WalmartAX3000

Material No. (Part Number): Z02-10485-R01

Producer (Written By): Li Wenke

Date of issue (Issued Date): 2024-03-07

Customer, CUSTOMER

engineering department	quality department	ratify
ENGINEER R&D DEPT	**QUALITY DEPT**	**APPROVED**

Free Walk

radio frequency R&D DEPT	engineering department ENGINEER R&D DEPT	ratify APPROVED
Li liberal arts	Qing Chuanghui	Deng Kai

Free WalkProprietary & Confidential © 2024Free Walk Corporation. All rightsreserved.

-

ShenzhenFree Walk Communication Technology Co.LTD

Document change CV

Form Number: QR-ZYX-084
Version: A0

product model				Document change record			
order number	Change type	document number	Change date	Change the content description	Production / revision	edition	remarks

Free WalkProprietary & Confidential © 2024Free Walk Corporation. All rightsreserved.

-

Catalogue Index

1. Cover Cover (Cover) 1

2. Document Change Resume Form (Document Change Resume) 2

3. Directory (Index) 1

4. Basic parameters (The basic parameters) 1

5. Engineering Drawing (Product Drawing) 1

VI. Test Equipment (Test Equipment & Conditions) 1

VII. Performance Test Report (Test Report) 7-10

VIII. RoHS Report List (RoHS report list) 11

IX. Packaging method (TEE PACKING WAY) 12

Free WalkProprietary & Confidential © 2024Free Walk Corporation. All rightsreserved.

–

Shenzhen Free Bank ~~Communication Technology Co.,~~ LTD. ShenzhenFree Walk Communication Technology Co. LTD

The basic parameters

A.Electrical Characteristics	
Frequency	5150 MHz~5850 MHz
VSWR	≤2
Efficiency	>60%
Impedance	50 Ohm
Polarization	Linear
Gain	3dBi±1
B. Material & Mechanical Characteristics	
Material of Radiator	
Cable Type	Φ 1.13 mm
Connector	Black
Type	generation IPEX
Dimension	
C. Environmental	
Operation Temperature	[illegible]
Storage Temperature	[illegible]

Free WalkProprietary & Confidential © 2024Free Walk Corporation. All rightsreserved.

-

序号	品名	材料/规格	颜色	数量	备注
①	PCB	FR4	黑色	1	
②	ø1.13射频线	Cu+编织带	黑色	1	
③	IPEX	第一代	金色	1	
④					

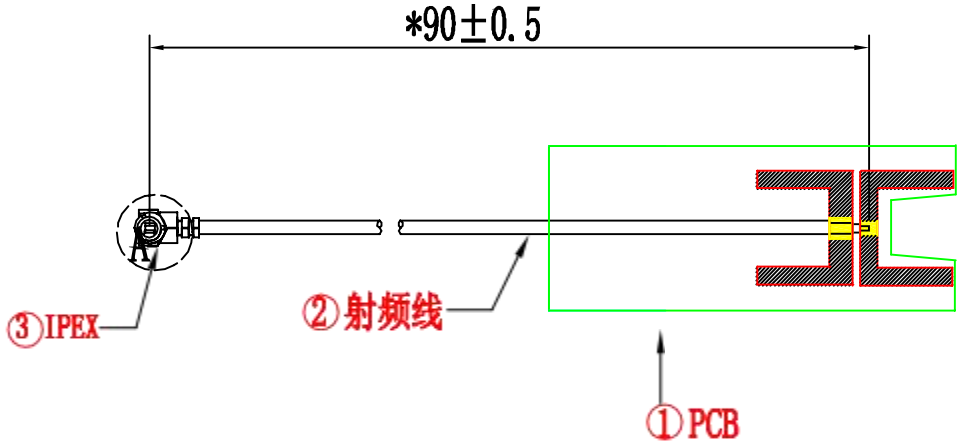

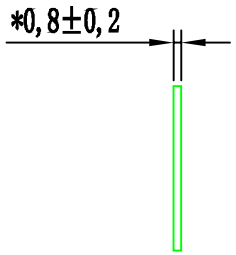

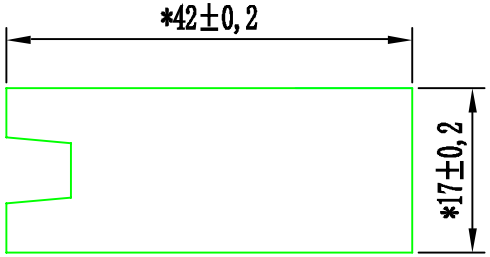

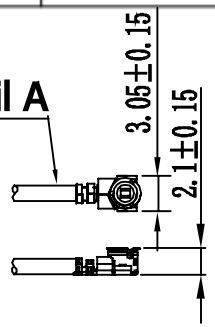

注:

1、标准*为重点尺寸,未标公差尺寸按±0.15检测
2、未标尺寸参考图纸;其它尺寸以实配为准;
3、为走线区域,为焊盘区域,为附胶区域
4、产品不能有油污、虚焊等不良现象;
5、符合ROHS

深圳自由行通信技术有限公司

第三角法				机种	WalmartAX3000	日期	2024/03/07	页码	
0~10	±0.10	○	0.02	品名	5G-内置天线	绘图		设计审核	QING
10~20	±0.15	◎	ø0.03	料号	Z02-10485-R01	审核			
20~40	±0.20	⊥	0.02	客户料号			射频	李文科	
40~	±0.25	▱	0.04	外观处理	V/A	确认			
		⌓	0.02	材质	N/A	单位	mm	比例	版本 R:A
请勿实测图纸	位置								

Test Equipment & Conditions

1. **Network Analyzers:**

   Agilent8753D5071C

2. **Communications Test Set:**

   Agilent 8960 CMW500

3. **3 D Chamber Test System**

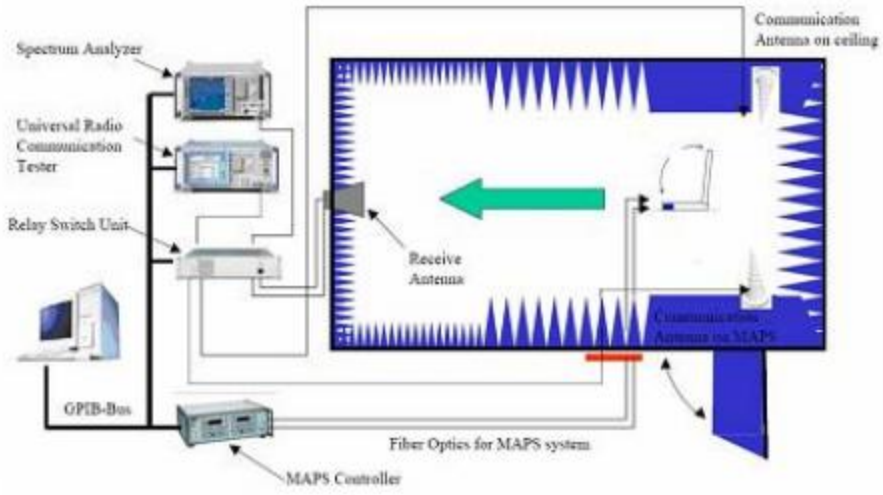

(Testing by 3D anechoic chamber)

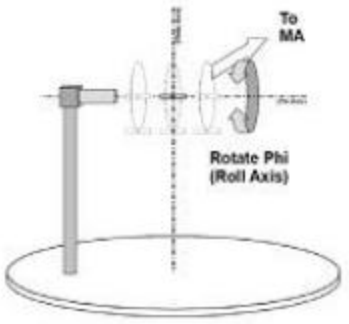

Phi axis test

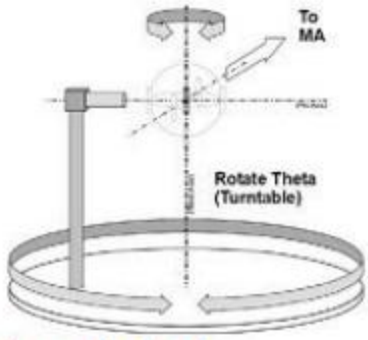

Theta axis test

Free WalkProprietary & Confidential © 2024Free Walk Corporation. All rightsreserved.

Shenzhen Free Bank ~~Communication Technology Co.,~~ LTD. ShenzhenFree Walk Communication Technology Co. LTD

test

data

SWR

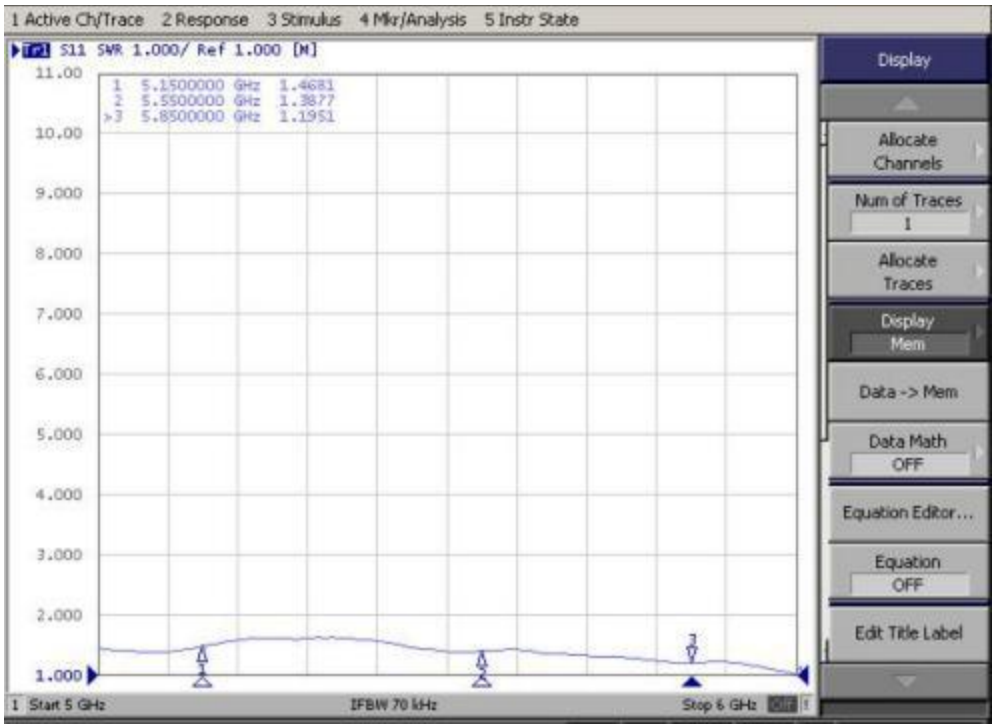

Free WalkProprietary & Confidential © 2024Free Walk Corporation. All rightsreserved.

-

Shenzhen Free Bank ~~Communication Technology Co.,~~ LTD. ShenzhenFree Walk Communication Technology Co. LTD

Efficiency & gain:

Efficency&Gain

Freq(MHz)	Effi(%)	Gain(dBi)
5150	65.96	3.08
5200	69.30	3.49
5250	69.99	3.54
5300	69.64	3.39
5350	68.79	3.86
5400	69.98	3.46
5450	65.15	3.53
5500	66.45	3.12
5550	68.68	3.07
5600	66.29	3.67
5650	66.78	3.43
5700	67.28	3.12
5750	69.99	3.07
5800	65.63	3.78
5850	66.12	3.34

Free WalkProprietary & Confidential © 2024Free Walk Corporation. All rightsreserved.

-

Shenzhen Free Bank ~~Communication Technology Co.,~~ LTD. ShenzhenFree Walk Communication Technology Co. LTD

directional diagram

Patten

3D graph

5150MHz

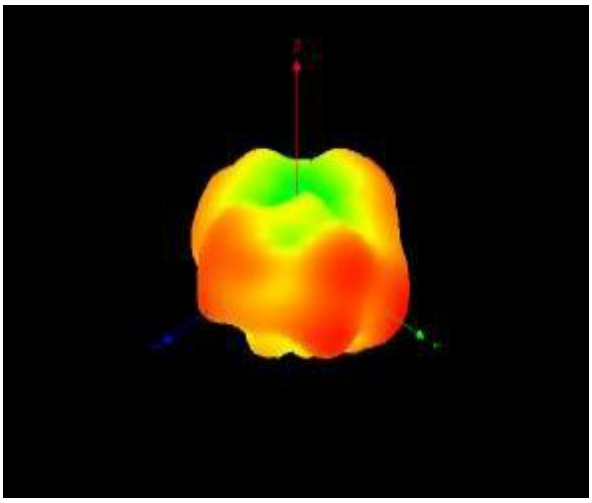

5550MHz

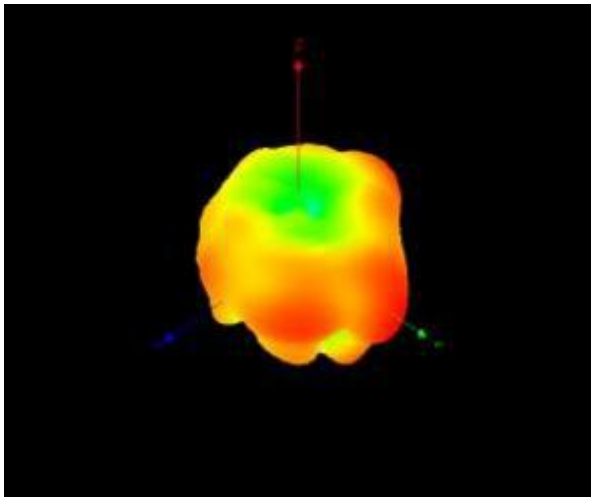

5850MHz

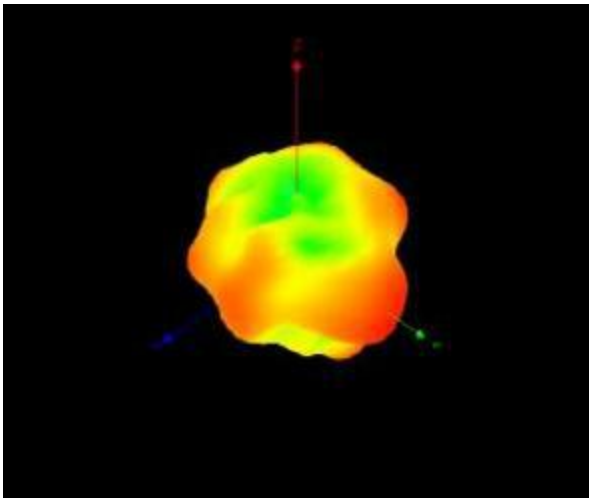

Free WalkProprietary & Confidential © 2024Free Walk Corporation. All rightsreserved.

-

2D graph

The

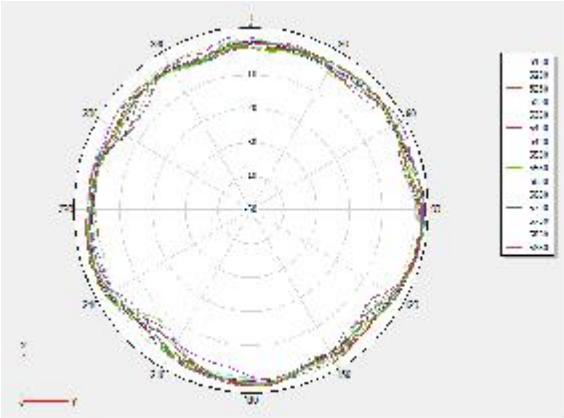

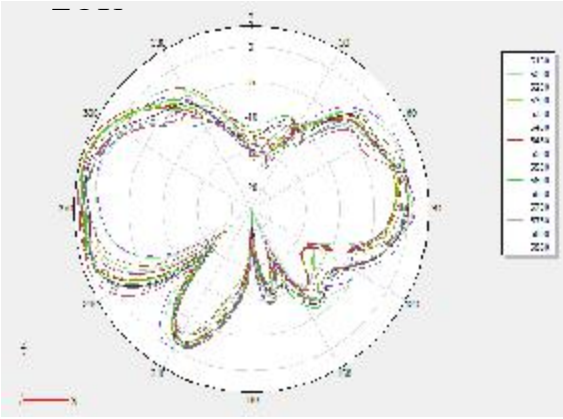

ZOY surface

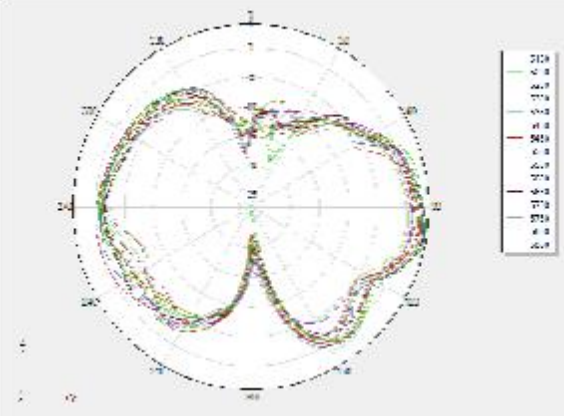

Free WalkProprietary & Confidential © 2024Free Walk Corporation. All rightsreserved.

–

ROHS report list of WIFI antenna material components of Shenzhen Free Communication Technology Co., LTD

order number	Raw material name	Raw material Suppliers (raw Manufacturer)	Testing institutions	report number	Date of detection	Detect expiration date
1	solder	TaiYuan	SGS	CANEC2302684204	2023.9.6	2024.9.6
2	tinned wird	Zhenxiong copper industry	CTI	A2230496550101001C	2023.9.26	2024.9.26
3	FR-4.0	Jin Anguo ji	SGS	CANEC23010851106	2023.10.11	2024.10.11
4	TPE	In the plastic	SGS	CANEC24002889703	2024.2.27	2025.2.27
5	H65 brass	Ningbo bowei	SGS	SHAEC23016464564	2023.10.18	2024.10.18
6	fluoroplastic FEP	Giant saint	SGS	NGBPC24000121242	2024.1.16	2025.1.16
7						

ask:

1. The report of the components must be tested by the test report of the unseparable care method and name material in accordance with the EU implementation requirements, other environmental regulations and other requirements

2. If the test report, the materials must include the original components. All materials are all the packaging materials of the department, social metal and other materials do not accept any form of central reports and three materials with three mixed test reports, whic ian three

3. The Company recognizes the following reports provided by the following nine testing institutions, SGS v, STS, set

4. All the test report shall be stamped on the front page of the official seal of the company. Each rep 必须完成行审核，确保所送报告符orged

此处盖公章 cial seal

品质专用章

Electronic file: reports can be scanned together, or separately, but for query

产品包装规范

产品名称:天线	版本：A00
	客户特殊要求除外

一：成品天线

二：用PE袋装起来,数量以(30 50PCS)整数装以实际为准

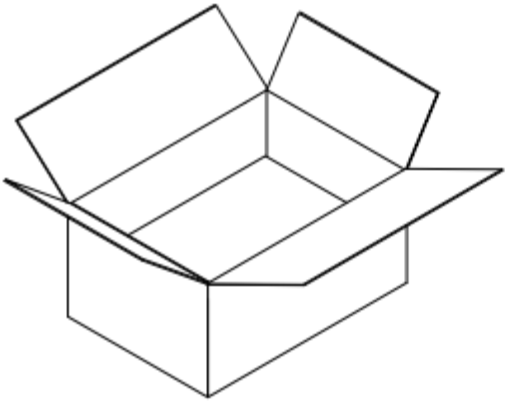

三：将装好的天线放入纸箱中(以实际数量为准)

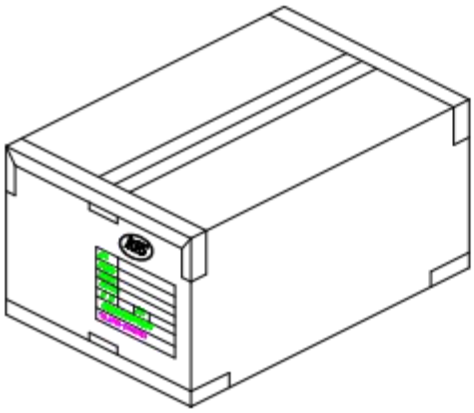

四：封箱,外箱贴我司生产标签和ROHS标签(最终以实际情况为准！)

Micro-grid Youlian Technology (Chengdu) Co., LTD

Sample acknowledgment

catalogue:	□ Drawing □ Packaging mode		
	□ Functional / Performance Test Report □ Reliability Test Report □ RoHs Report		
Reason for sample delivery:	□ first sample delivery		
	□ Sample expired replacement □ sample loss of sample replacement □ replication sample		
Name of supplier:	Shenzhen Free Bank Communication Technology Co., LTD		
Supplier No.:	Z02-10483-R01	Name model:	WalmartAX3000
Customer Material Number / Version:		Mold point number:	
Supplier formulation / date	Supplier Review / Date	Customer RD Validation / Date	Customer quality confirmation / date

2024/3/7	2024/3/7		
remarks:			

Shenzhen Free Bank ~~Communication Technology Co.,~~ Ltd. ShenzhenFree Walk Communication Technology Co. LTD

ADD: 3rd floor, Building 2, Hezhou West Industrial Park, Xixiang, Baoan, Shenzhen

Email:zyx_sz@yeah.net

TEL: 86-0755-29955983 FAX: 86-0755-29955983

acknowledgement

Customer (Customer): microgrid products (Product): 2.4G built-in antenna (L=110mm)

Model number (Model): WalmartAX3000

Material number (Part Number): Z02-10483-R01

Producer (Written By): Li Wenke

Date of issue (Issued Date): 2024-03-07

Customer, CUSTOMER

engineering department	quality department	ratify
ENGINEER R&D DEPT	**QUALITY DEPT**	**APPROVED**

Free Walk

radio frequency R&D DEPT	engineering department ENGINEER R&D DEPT	ratify APPROVED
Li liberal arts	Qing Chuanghui	Deng Kai

Free WalkProprietary & Confidential © 2024Free Walk Corporation. All rightsreserved.

-

Shenzhen Free Bank Communication Technology Co., LTD

ShenzhenFree Walk Communication Technology Co.LTD

Document change CV

Form Number: QR-ZYX-084
Version: A0

product model				Document change record			
order number	Change type	document number	Change date	Change the content description	Production / revision	edition	remarks

Free WalkProprietary & Confidential © 2024Free Walk Corporation. All rightsreserved.

-

catalogue

Index

1. Cover Cover (Cover) 1

2. Document Change Resume Form (Document Change Resume) 2

3. Directory (Index) 1

4. Basic parameters (The basic parameters) 1

5. Engineering Drawing (Product Drawing) 1

VI. Test Equipment (Test Equipment & Conditions) 1

VII. Performance Test Report (Test Report) 7-10

VIII. RoHS Report List (RoHS report list) 11

IX. Packaging method (TEE PACKING WAY) 12

Free WalkProprietary & Confidential © 2024Free Walk Corporation. All rightsreserved.

The basic parameters

A.Electrical Characteristics	
Frequency	2400 MHz~2500 MHz
VSWR	≤2
Efficiency	>60%
Impedance	50 Ohm
Polarization	Linear
Gain	4dBi±1
B. Material & Mechanical Characteristics	
Material of Radiator	
Cable Type	Φ 1.13 mm
Connector	Gray
Type	generation
Dimension	IPEX
C. Environmental	
Operation Temperature	[illegible]
Storage Temperature	[illegible]

Free WalkProprietary & Confidential © 2024Free Walk Corporation. All rightsreserved.

序号	品名	材料/规格	颜色	数量	备注
①	PCB	FR4	黑色	1	
②	ø1.13射频线	Cu+编织带	灰色	1	
③	IPEX	第一代	金色	1	
④					

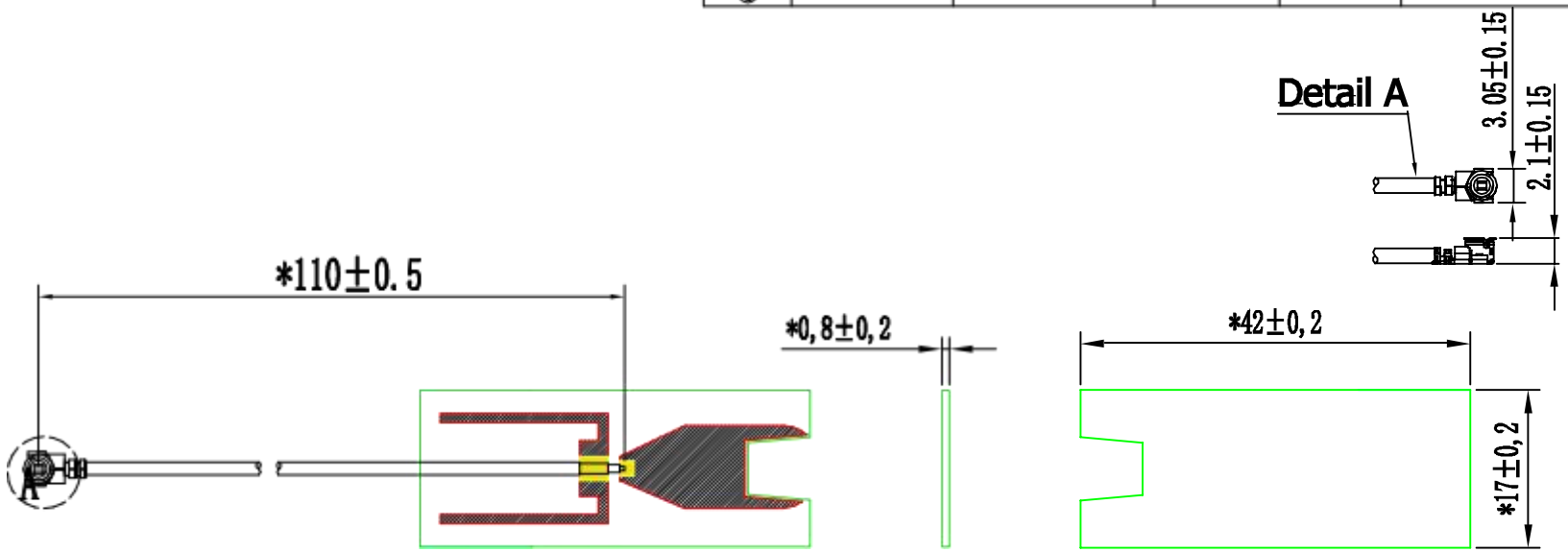

注:

1、标准*为重点尺寸,未标公差尺寸按±0.15检测
2、未标尺寸参考图纸;其它尺寸以实配为准;
3、为走线区域,为焊盘区域,为附胶区域
4、产品不能有油污、虚焊等不良现象;
5、符合ROHS

深圳自由行通信技术有限公司

第三角法				机种	WalmartAX3000	日期	2024/03/07	页码	
0~10	±0.10	○	0.02	品名	2.4G-内置天线	绘图		设计审核	QING
10~20	±0.15	◎	ø0.03	料号	Z02-10483-R01	审核			
20~40	±0.20	⊥	0.02	客户料号			射频	李文科	
40~	±0.25	▱	0.04	外观处理	V/A	确认			
		⌓	0.02	材质	N/A	单位	mm	比例	版本 R:A
请勿实测图纸	位置								

Test Equipment & Conditions

1. **Network Analyzers:**

   Agilent8753D5071C

2. **Communications Test Set:**

   Agilent 8960 CMW500

3. **3 D Chamber Test System**

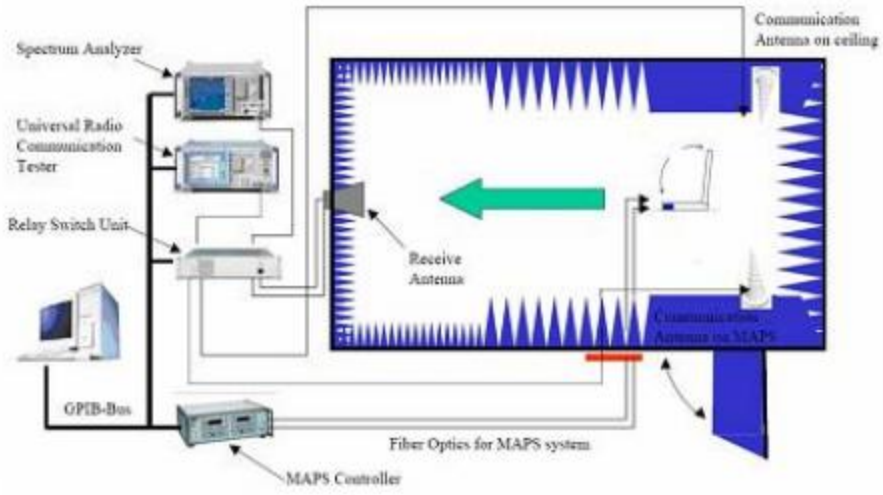

(Testing by 3D anechoic chamber)

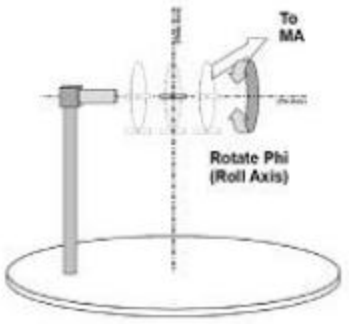

Phi axis test

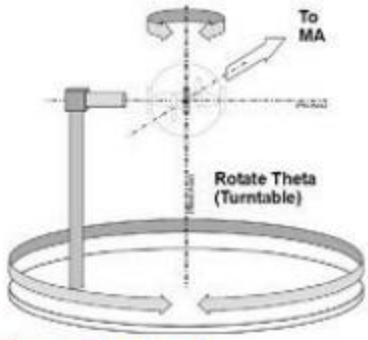

Theta axis test

Free WalkProprietary & Confidential © 2024Free Walk Corporation. All rightsreserved.

test

data

SWR

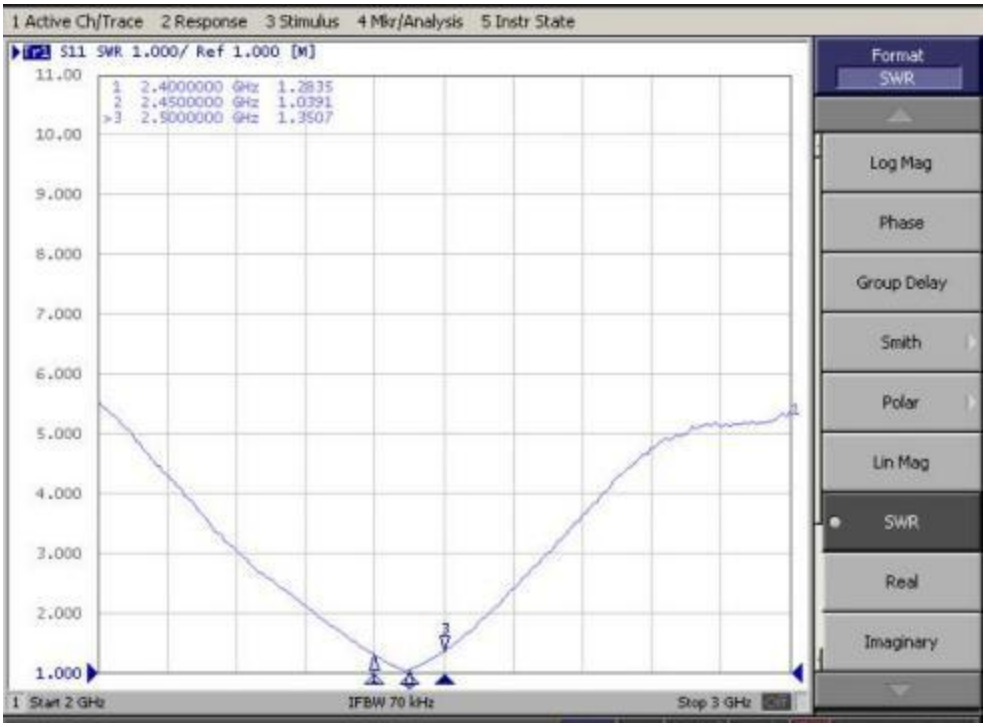

Free WalkProprietary & Confidential © 2024Free Walk Corporation. All rightsreserved.

-

Efficiency & gain:

Efficency&Gain

Freq(MHz)	Effi(%)	Gain(dBi)
2400	66.68	4.06
2410	67.92	4.29
2420	64.86	3.95
2430	64.27	4.05
2440	69.34	4.00
2450	69.98	4.27
2460	65.46	3.84
2470	62.23	3.97
2480	65.92	4.25
2490	66.68	4.28
2500	63.39	4.13

Free WalkProprietary & Confidential © 2024Free Walk Corporation. All rightsreserved.

directional diagram

Patten

3D graph

2400MHz

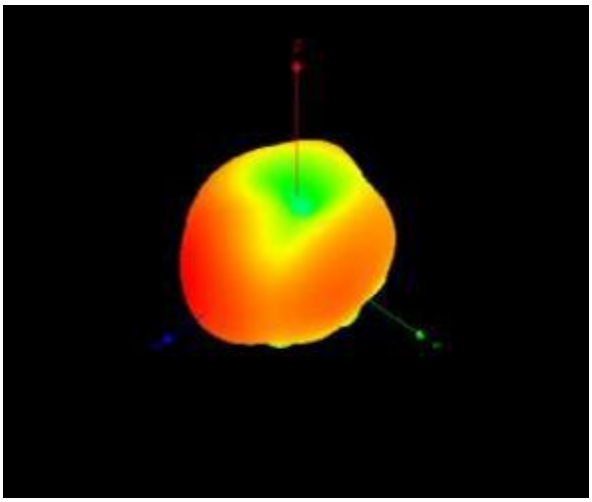

2450MHz

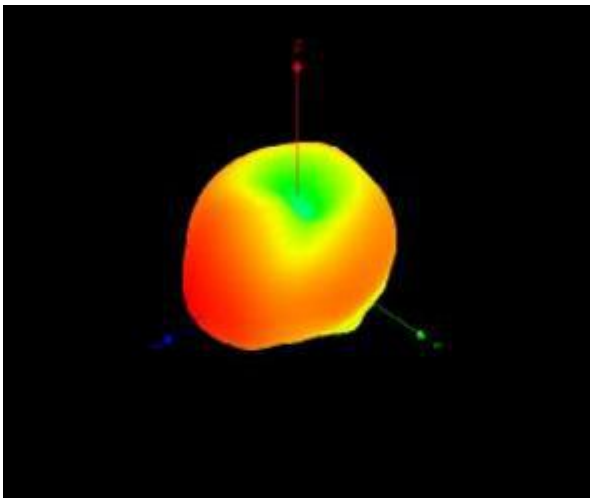

2500MHz

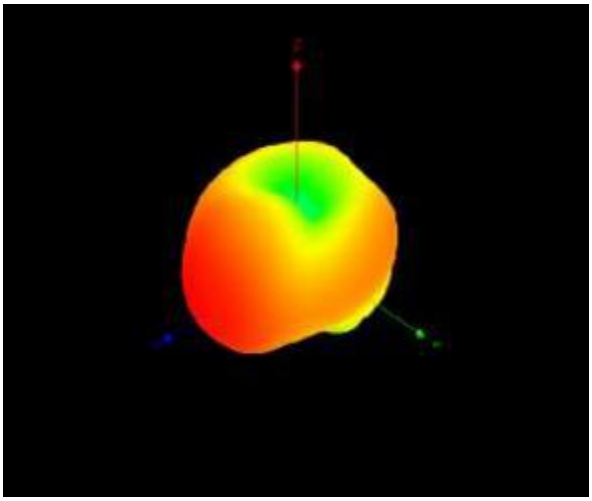

Free WalkProprietary & Confidential © 2024Free Walk Corporation. All rightsreserved.

XOY surface

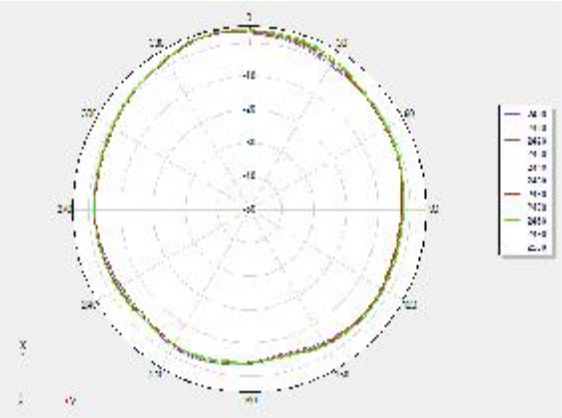

A 2D

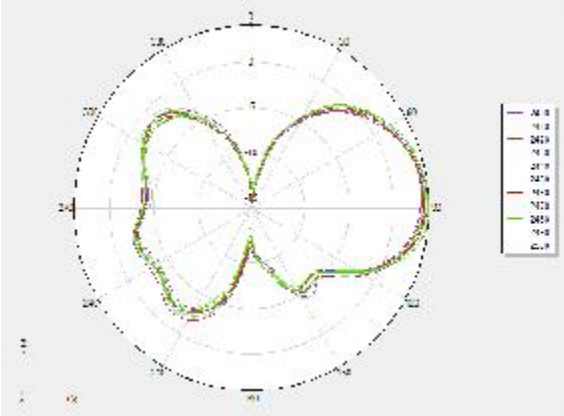

ZOY surface

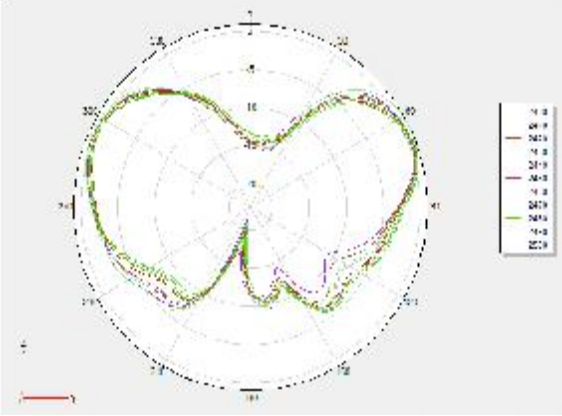

Free WalkProprietary & Confidential © 2024Free Walk Corporation. All rightsreserved.

ROHS report list of WIFI antenna material components of Shenzhen Free Communication Technology Co., LTD

order number	Raw material name	Raw material Suppliers (raw Manufacturer)	Testing institutions	report number	Date of detection	Detect expiration date
1	solder	TaiYuan	SGS	CANEC2302684204	2023.9.6	2024.9.6
2	tinned wird	Zhenxiong copper industry	CTI	A2230496550101001C	2023.9.26	2024.9.26
3	FR-4.0	Jin Anguo ji	SGS	CANEC23010851106	2023.10.11	2024.10.11
4	TPE	In the plastic	SGS	CANEC24002889703	2024.2.27	2025.2.27
5	H65 brass	Ningbo bowei	SGS	SHAEC23016464564	2023.10.18	2024.10.18
6	fluoroplastic FEP	Giant saint	SGS	NGBPC24000121242	2024.1.16	2025.1.16
7						

ask:

1. The report of the components must be tested by the test report of the unseparable care method and name material in accordance with the EU implementation requirements, other environmental regulations and other requirements

2. If the test report, the materials must include the original components. All materials are all the packaging materials of the department, social metal and other materials do not accept any form of central reports, and three materials with three mixed test reports, whic ian three

3. The Company recognizes the following reports provided by the following nine testing institutions, SGS v, STS, set

4. All the test report should be stamped on the front page with the official seal of the company. Each 必须完成行审核，确保所送报告有 or forged

此处盖公章 cial seal

品质专用章

Electronic file: reports can be scanned together, or separately, but for query

产品包装规范

产品名称:天线	版本：A00
	客户特殊要求除外

一：成品天线

二：用PE袋装起来,数量以(30 50PCS)整数装以实际为准

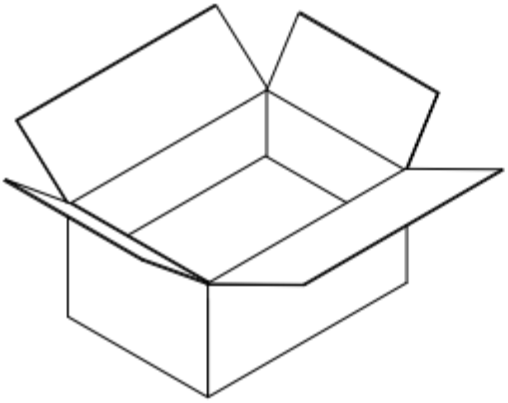

三：将装好的天线放入纸箱中(以实际数量为准)

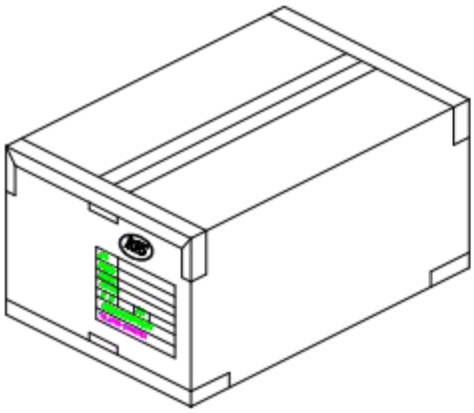

四：封箱,外箱贴我司生产标签和ROHS标签(最终以实际情况为准！)

Micro-grid Youlian Technology (Chengdu) Co., LTD

Sample acknowledgment

catalogue:	□ Drawing □ Packaging mode		
	□ Functional / Performance Test Report □ Reliability Test Report □ RoHs Report		
Reason for sample delivery:	□ first sample delivery		
	□ Sample expired replacement □ sample loss of sample replacement □ replication sample		
Name of supplier:	Shenzhen Free Bank Communication Technology Co., LTD		
Supplier No.:	Z02-10484-R01	Name model:	WalmartAX3000
Customer Material Number / Version:		Mold point number:	
Supplier formulation / date	Supplier Review / Date	Customer RD Validation / Date	Customer quality confirmation / date

2024/3/7	2024/3/7		
remarks:			

Shenzhen Free Bank ~~Communication Technology Co.,~~ LTD. ShenzhenFree Walk Communication Technology Co. LTD

ADD: 3rd floor, Building 2, Hezhou West Industrial Park, Xixiang, Baoan, Shenzhen

Email:zyx_sz@yeah.net

TEL: 86-0755-29955983 FAX: 86-0755-29955983

acknowledgement

Customer (Customer): microgrid products (Product): 2.4G built-in antenna (L=160mm)

Model number (Model): WalmartAX3000

Material No. (Part Number): Z02-10484-R01

Producer (Written By): Li Wenke

Date of issue (Issued Date): 2024-03-07

Customer, CUSTOMER

engineering department	quality department	ratify
ENGINEER R&D DEPT	**QUALITY DEPT**	**APPROVED**

Free Walk

radio frequency R&D DEPT	engineering department ENGINEER R&D DEPT	ratify APPROVED
Li liberal arts	Qing Chuanghui	Deng Kai

Free WalkProprietary & Confidential © 2024Free Walk Corporation. All rightsreserved.

-

Document change CV

Form Number: QR-ZYX-084
Version: A0

product model				Document change record			
order number	Change type	document number	Change date	Change the content description	Production / revision	edition	remarks

Free WalkProprietary & Confidential © 2024Free Walk Corporation. All rightsreserved.

catalogue

Index

1. Cover Cover (Cover).....1

2. Document Change Resume Form (Document Change Resume).....2

3. Directory (Index).....1

4. Basic parameters (The basic parameters).....1

5. Engineering Drawing (Product Drawing).....1

VI. Test Equipment (Test Equipment & Conditions).....1

VII. Performance Test Report (Test Report).....7-10

VIII. RoHS Report List (RoHS report list).....11

IX. Packaging method (TEE PACKING WAY).....12

Free WalkProprietary & Confidential © 2024Free Walk Corporation. All rightsreserved.

The basic parameters

A.Electrical Characteristics	
Frequency	2400 MHz~2500 MHz
VSWR	≤2
Efficiency	>60%
Impedance	50 Ohm
Polarization	Linear
Gain	4dBi±1
B. Material & Mechanical Characteristics	
Material of Radiator	
Cable Type	Φ 1.13 mm
Connector	Gray
Type	generation
Dimension	IPEX
C. Environmental	
Operation Temperature	[illegible]
Storage Temperature	[illegible]

Free WalkProprietary & Confidential © 2024Free Walk Corporation. All rightsreserved.

序号	品名	材料/规格	颜色	数量	备注
①	PCB	FR4	黑色	1	
②	ø1.13射频线	Cu+编织带	灰色	1	
③	IPEX	第一代	金色	1	
④					

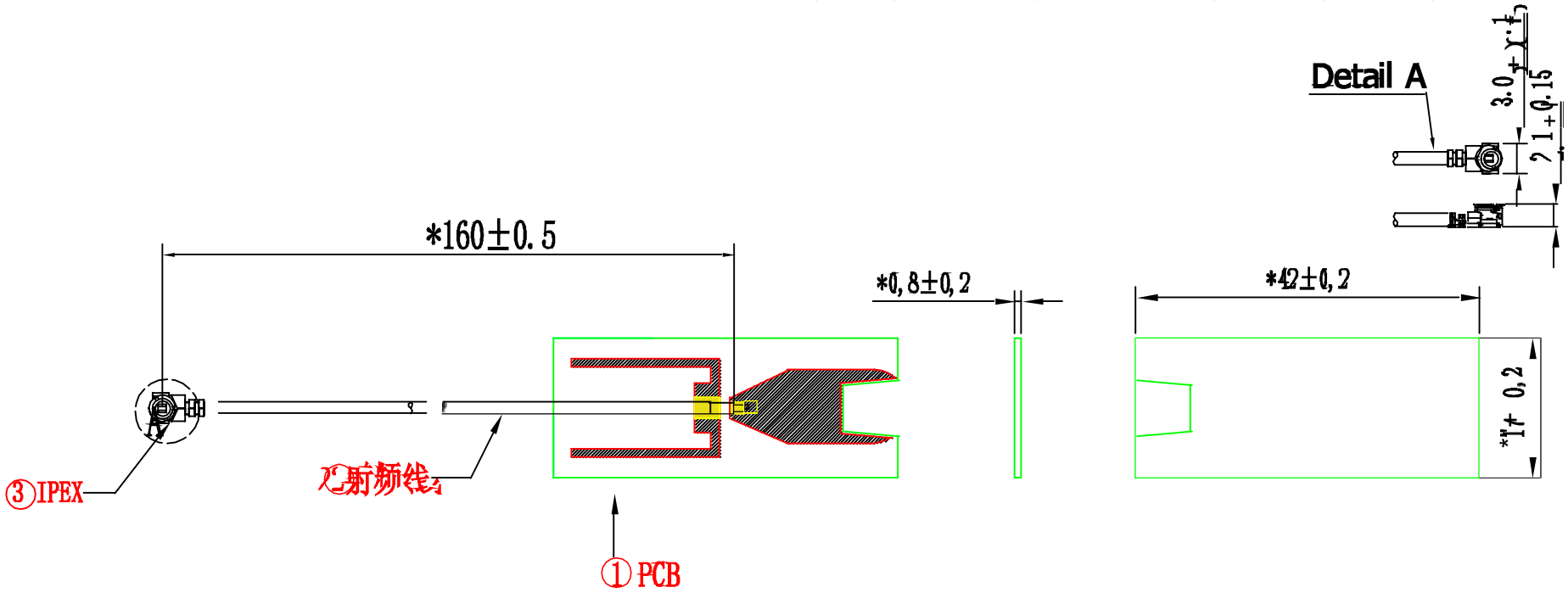

注：

1、标准*为重点尺寸，未标公差尺寸按±0.15制作！
2、未标尺寸参考图纸；其它尺寸以实配为准；
3、为走线区域，为焊盘区域，为附胶区域
4、产品不能有油污、虚焊等不良现象；
5、符合ROHS

深圳自由行运动科技有限公司

0~10	±0.10	○	0.02	品名	2.4G/5.8G双频天线	绘图	设计审核
10~20	±0.15	◎	ø0.03	料号	2.4G:104SP-1(G1)	审核	
20~40	±0.20	⊥	0.02	客户料号		审核	自由行 李文科
40~	±0.25	▱	0.04	物料编号	N/A	审核	
		⌒	0.02	材质	N/A	单位 mm	比例

Test Equipment & Conditions

1. Network Analyzers:

Agilent8753D5071C

2. Communications Test Set:

Agilent 8960 CMW500

3. 3 D Chamber Test System

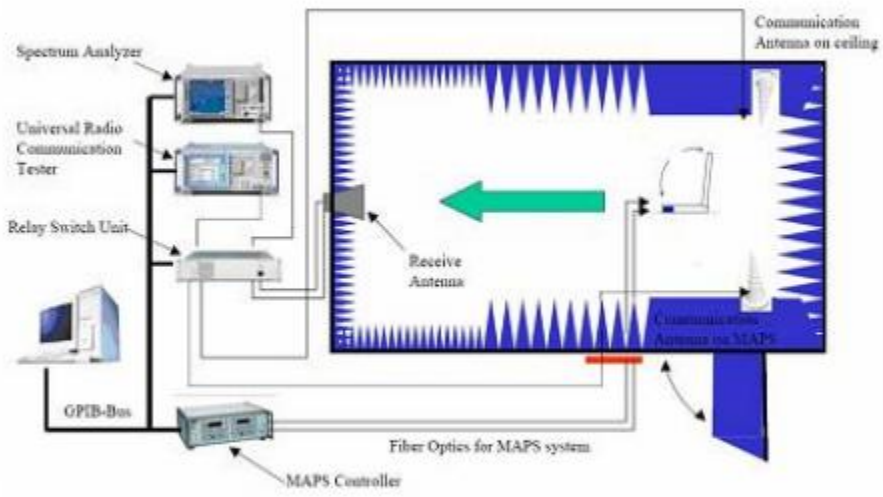

(Testing by 3D anechoic chamber)

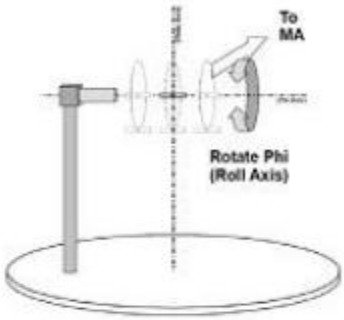

Phi axis test

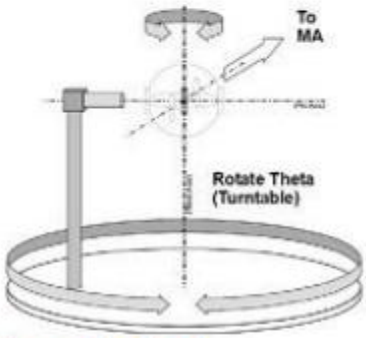

Theta axis test

Free WalkProprietary & Confidential © 2024Free Walk Corporation. All rightsreserved.

test

data

SWR

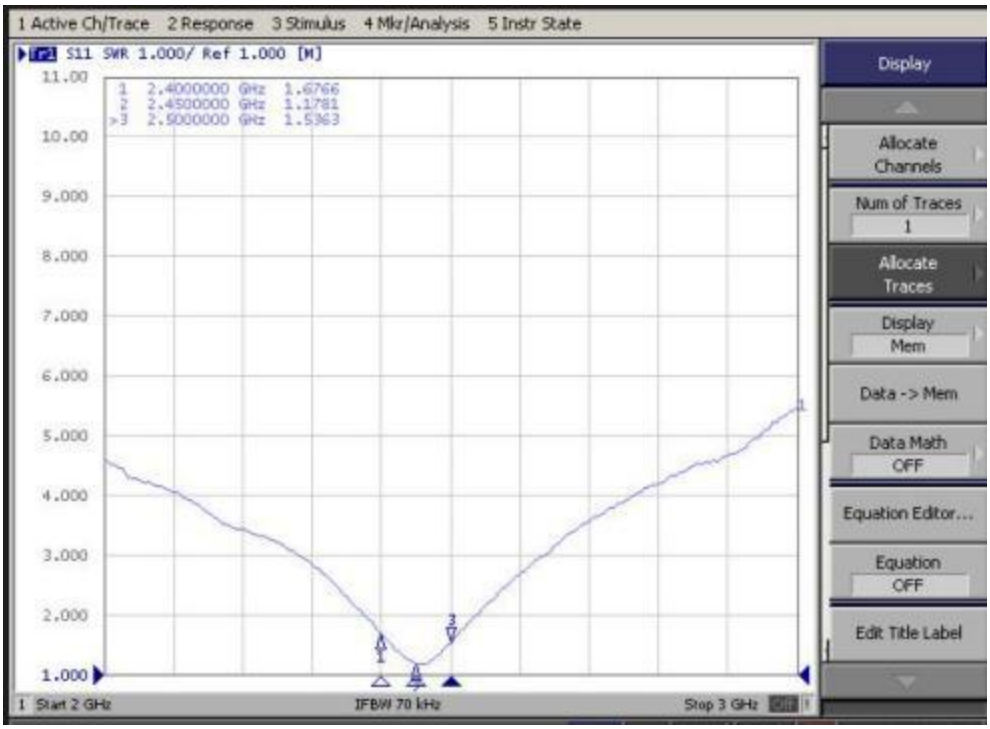

Free WalkProprietary & Confidential © 2024Free Walk Corporation. All rightsreserved.

Efficiency & gain:

Efficency&Gain

Freq(MHz)	Effi(%)	Gain(dBi)
2400	69.63	4.20
2410	67.39	4.31
2420	67.55	4.00
2430	68.63	4.33
2440	69.44	3.98
2450	69.79	4.11
2460	66.83	3.68
2470	65.46	3.91
2480	67.30	3.96
2490	65.31	3.73
2500	62.37	3.67

Free WalkProprietary & Confidential © 2024Free Walk Corporation. All rightsreserved.

directional diagram

Patten

3D graph

2400MHz

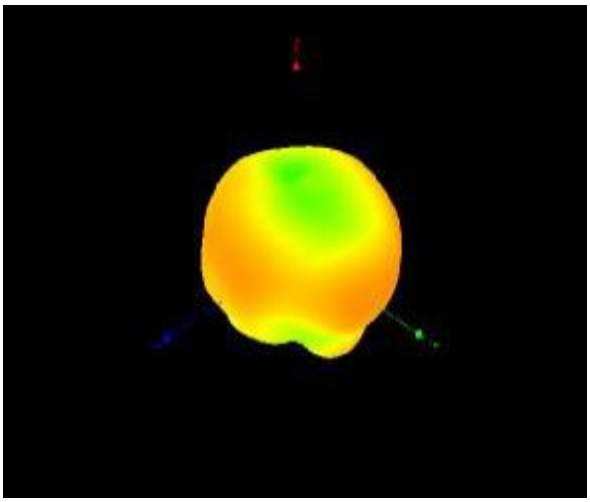

2450MHz

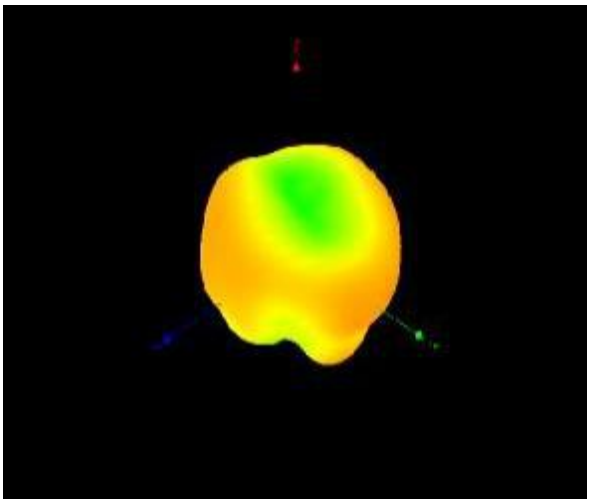

2500MHz

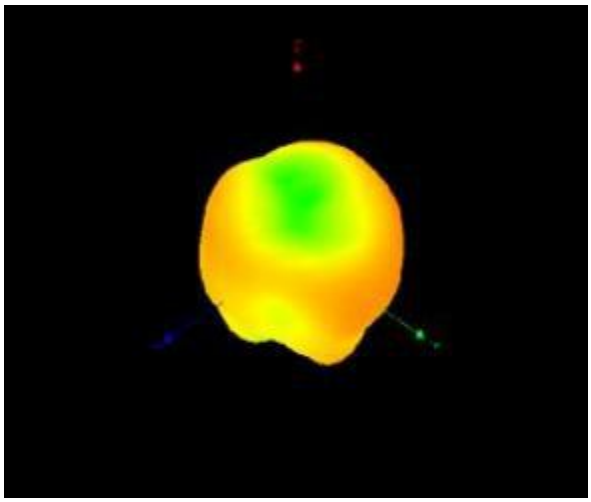

Free WalkProprietary & Confidential © 2024Free Walk Corporation. All rightsreserved.

2D graph

XOY surface

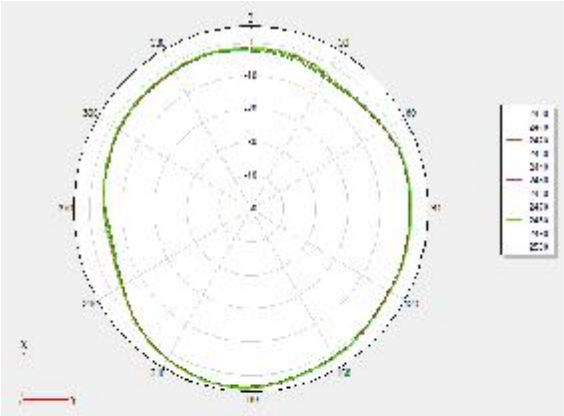

ZOX

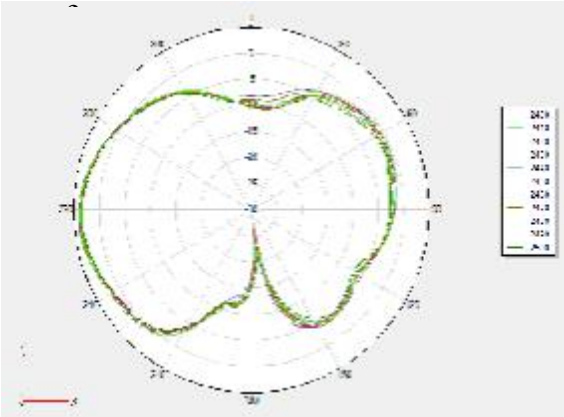

ZOY surface

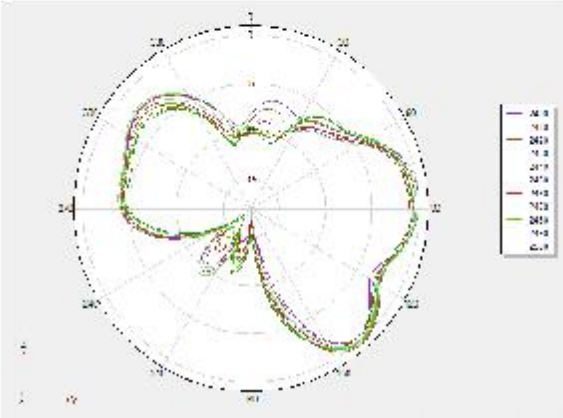

Free WalkProprietary & Confidential © 2024Free Walk Corporation. All rightsreserved.

ROHS report list of WIFI antenna material components of Shenzhen Free Communication Technology Co., LTD

order number	Raw material name	Raw material Suppliers (raw Manufacturer)	Testing institutions	report number	Date of detection	Detect expiration date
1	solder	TaiYuan	SGS	CANEC2302684204	2023.9.6	2024.9.6
2	tinned wird	Zhenxiong copper industry	CTI	A2230496550101001C	2023.9.26	2024.9.26
3	FR-4.0	Jin Anguo ji	SGS	CANEC23010851106	2023.10.11	2024.10.11
4	TPE	In the plastic	SGS	CANEC24002889703	2024.2.27	2025.2.27
5	H65 brass	Ningbo bowei	SGS	SHAEC23016464564	2023.10.18	2024.10.18
6	fluoroplastic FEP	Giant saint	SGS	NGBPC24000121242	2024.1.16	2025.1.16
7						

ask:

1. The report of the components must be tested by the test report of the unseparable care method and name material in accordance with the EU implementation requirements, other environmental regulations and other requirements

2. If the test report, the materials must include the original components. All materials are all the packaging materials of the department, social metal and other materials do not accept any form of central reports, and three materials with three mixed test reports, whic ian three

3. The Company recognizes the following reports provided by the following nine testing institutions, SGS v, STS, set

4. All the test report should be stamped on the front page with the official seal of the company. Each 必须完成行审核，确保所送报告有 or forged

此处盖公章 cial seal

品质专用章

Electronic file: reports can be scanned together, or separately, but for query

产品包装规范

产品名称:天线	版本：A00
	客户特殊要求除外

一：成品天线

二：用PE袋装起来,数量以(30 50PCS)整数装以实际为准

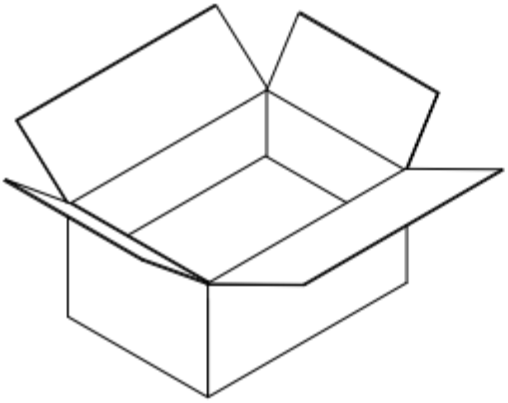

三：将装好的天线放入纸箱中(以实际数量为准)

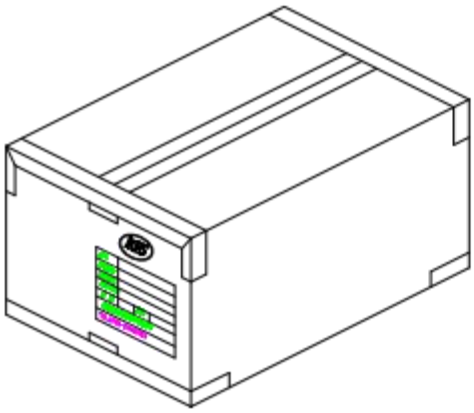

四：封箱,外箱贴我司生产标签和ROHS标签(最终以实际情况为准！)