ELECQ
Elecq Home
Model: AU105
SN: AU102A8G000189
Input/Output: 208/240VAC 40A 60Hz
Operating Temp: -40 to 50°C
Protection: Type 4 Raintight
ELECQ 7th Floor,Building 9, Changyuan
Xincai, Gaoxin Middle 1st Road No.2,
Nanshan,Shenzhen,Guangdong,China
Made in China | www.elecq.com

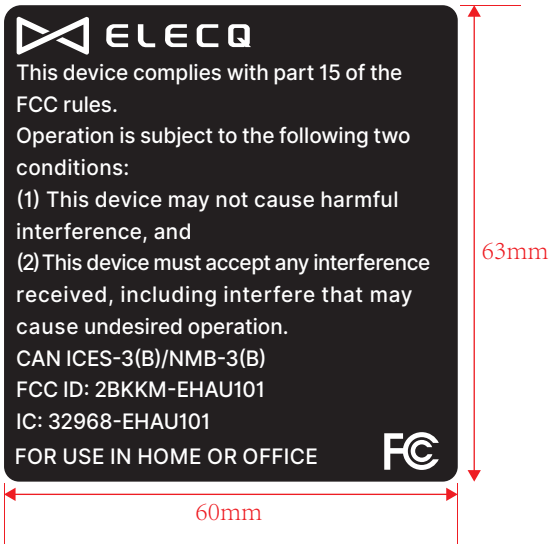
ELECQ
This device complies with part 15 of the FCC rules.
Operation is subject to the following two conditions:
(1) This device may not cause harmful interference, and
(2) This device must accept any interference received, including interfere that may cause undesired operation.
CAN ICES-3(B)/NMB-3(B)
FCC ID: 2BKKM-EHAU101
IC: 32968-EHAU101
FOR USE IN HOME OR OFFICE
63mm
60mm

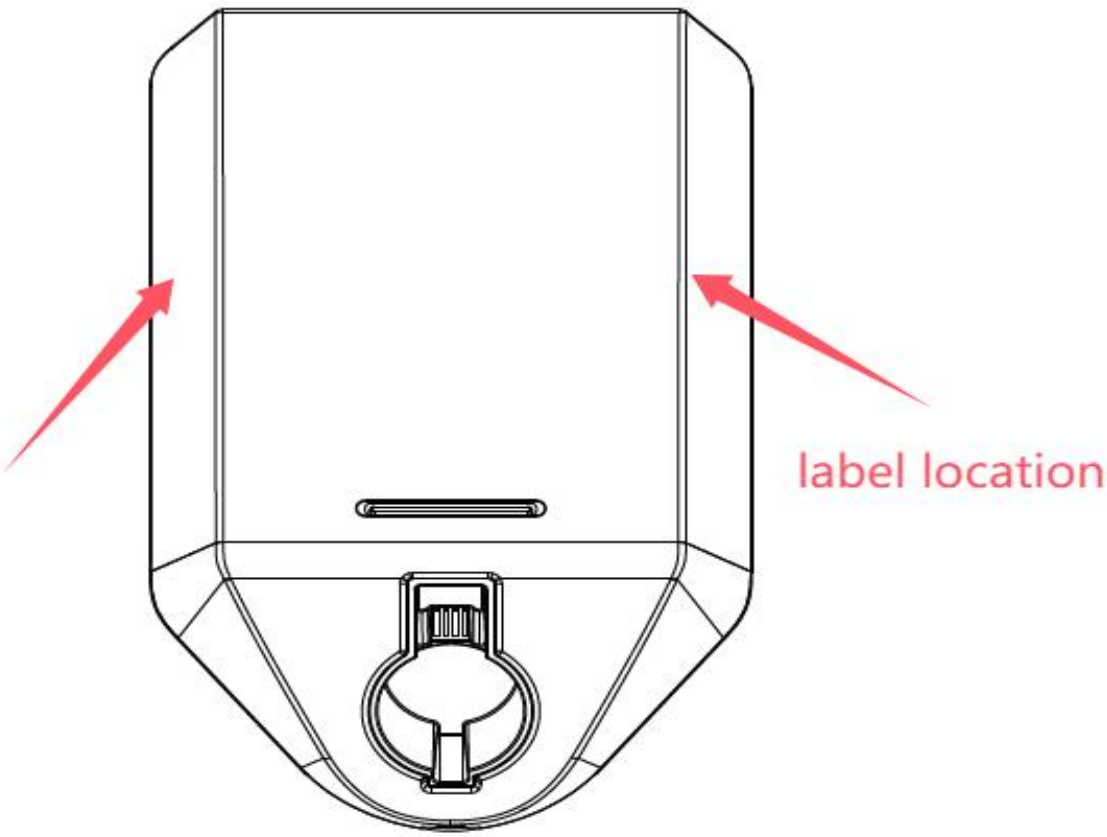
label location