ROKR

PARALLEL WORLD

MARBLE RUN

MR01 THE LAST CITY

ASSEMBLY INSTRUCTION

File No: MR01UM-V1.0

WARNING

1. The product is not suitable for children under 3 years old.
2. The product contains small parts and electronic components. Adults should guide and supervise children in the correct use of the product to prevent ingestion or choking.
3. The product shall only be used with a transformer or a power supply for it.
4. The transformer or power supply is not a toy or model.
5. This product does not need to be cleaned with liquid, and please use a clean and soft dry cloth to wipe.
6. Keep the product away from the sources of ignition and keep it in dry place in case of the damage.
7. The power supply used with the electric toy shall be regularly examined for damage to the supply cord, plug, enclosure or other parts, and in the event of damage, it shall not be used until the damage has been repaired.
8. Do not connect the wire to the output socket.
9. The product is not to be connected to more than the recommended number of power supplies.
10. This product is only to be connected to equipment of Class II . ⧈
11. The instruction must be retained since it contains important information.

Warning: Changes or modifications to this unit not expressly approved by the party responsible for compliance could void the user' s authority to operate the equipment.

NOTE: This equipment has been tested and found to comply with the limits for a Class B digital device, pursuant to Part 15 of the FCC Rules. These limits are designed to provide reasonable protection against harmful interference in a residential installation. This equipment generates, uses and can radiate radio frequency energy and, if not installed and used in accordance with the instructions, may cause harmful interference to radio communications.However, there is no guarantee that interfererce will not occur in a particular installation. If this equipment does cause harmful interference to radio or television reception, which can be determined by turning the equipment off and on, the user is encouraged to try to correct the interference by one or more of the following measures:

-Reorient or relocate the receiving antenna.
-Increase the separation between the equipment and receiver.
-Connect the equipment into an outlet on a circuit different from that to which the receiver is connected.
-Consult the dealer or an experienced radio/TV technician for help.

This device complies with Part 15 of the FCC Rules. Operation is subject to the following two conditions:

(1) this device may not cause harmful interference, and

(2) this device must accept any interference received, including interference that may cause undesired operation.

Frequency:2426MHz Transmission Power:<10mW For RED

ATTENTION

1. Don't use chemical reagents like alcohol and ammonia water to clean the product.
2. Take off the pieces from the board according to each step when assembling.
3. Cut the parts along the edge with cutting pliers and then grind them carefully with a sandpaper stick.
4. Please carefully read the instruction book when assembling and keep it properly for later verification.
5. For some complicated steps, please scan the QR code with remind for assembling videos.
6. There is a little difference between several parts and the pictures on instruction, subject to parts number.
7. Pieces marked "+" are spare parts on boards.
8. The QR code on the cover is the after-sales certificate, and please do not alter it.

Please contact us on Facebook or email if you have any questions.

***CUSTOMER SERVICE**

ROKR Facebook: @rokrofficial Email: service@robotime.com

Product Display

Gameplay Instruction

Lift module
(upward mechanism)

Marble run module
(downward mechanism)

- The Parallel World products contain marble run modules and lift modules.
(The orange line is an illustration of the route of marble after assembling.)

1 <1>

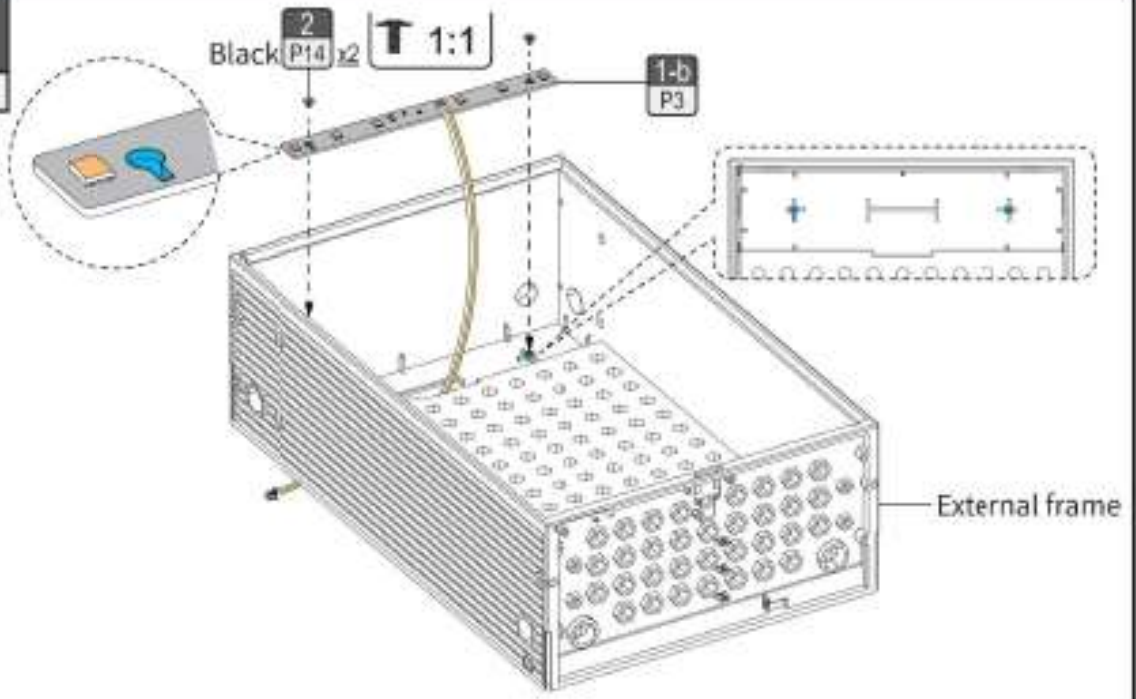

1 <2>

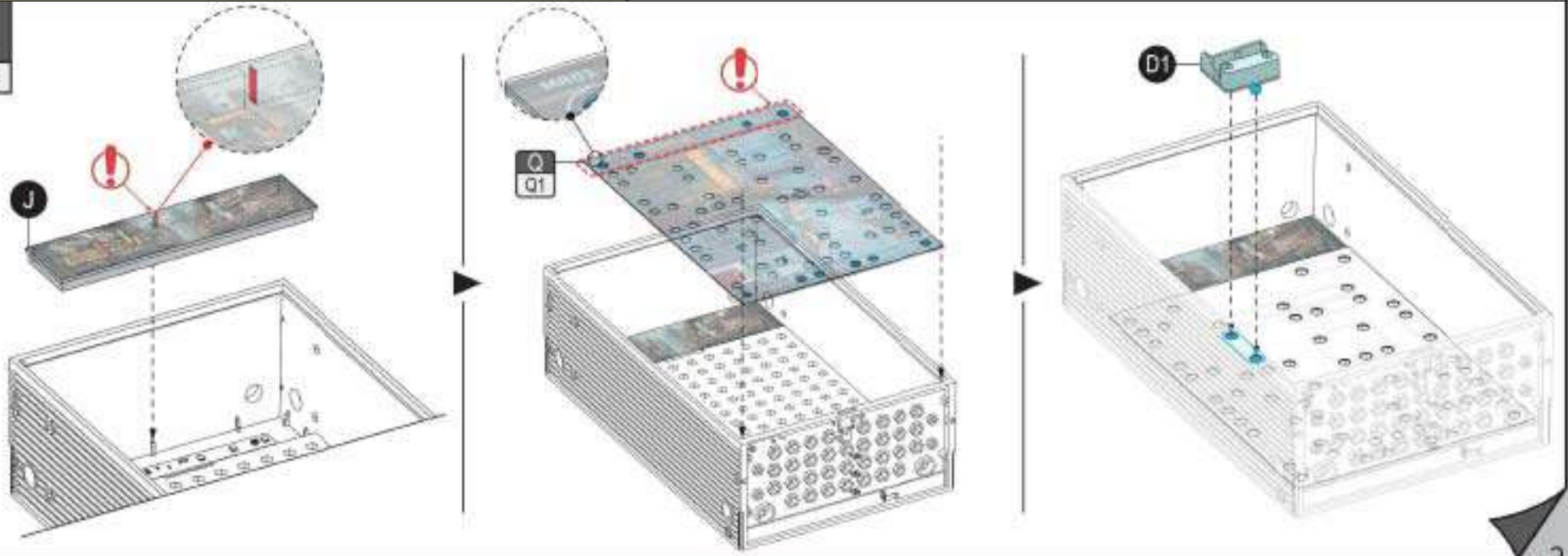

1

<3>

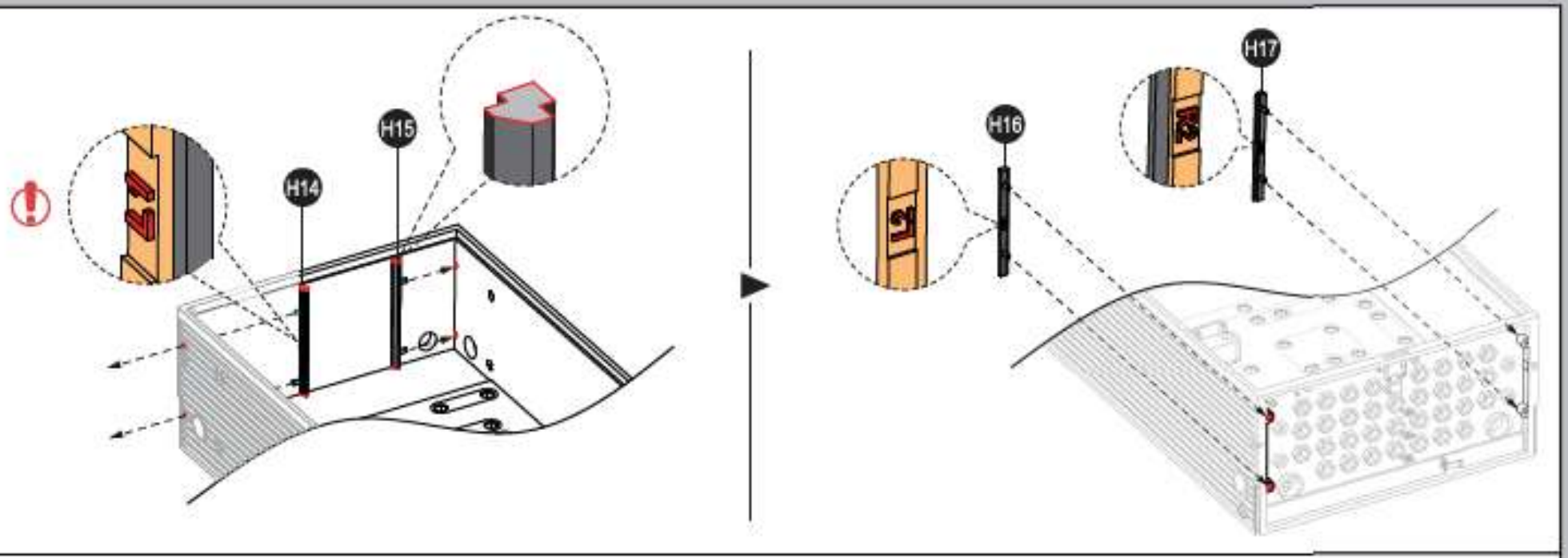

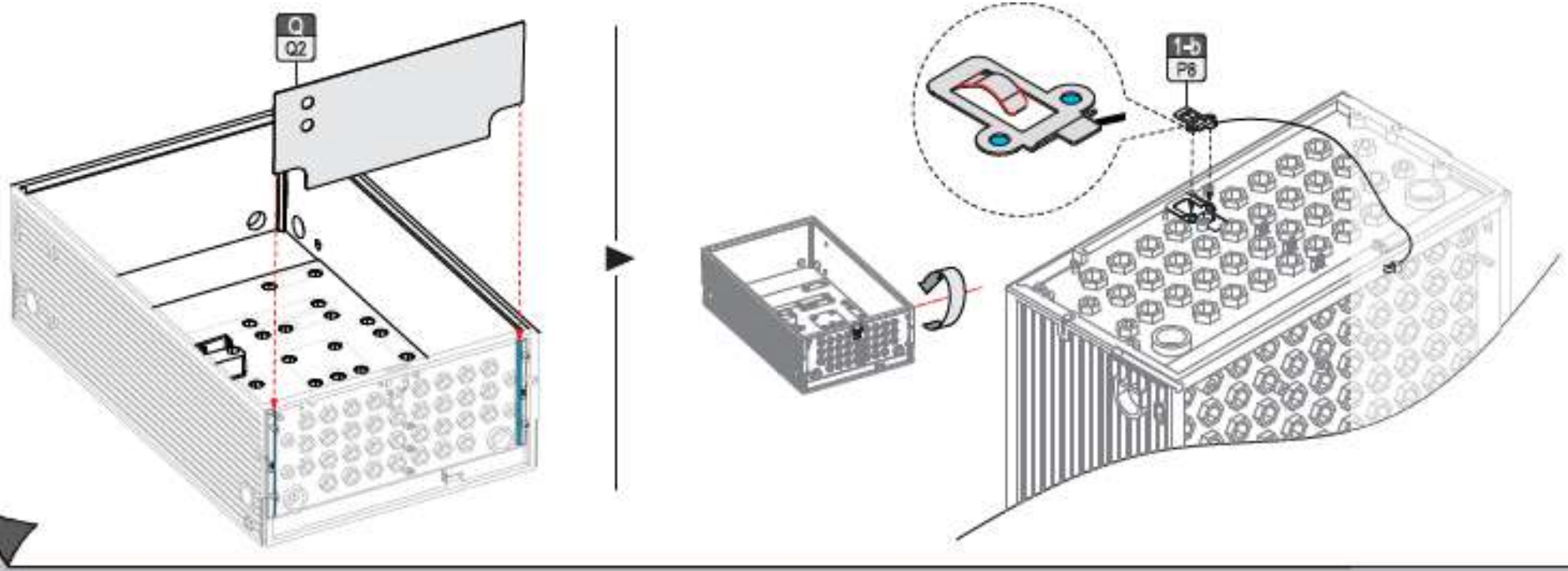

1

<4>

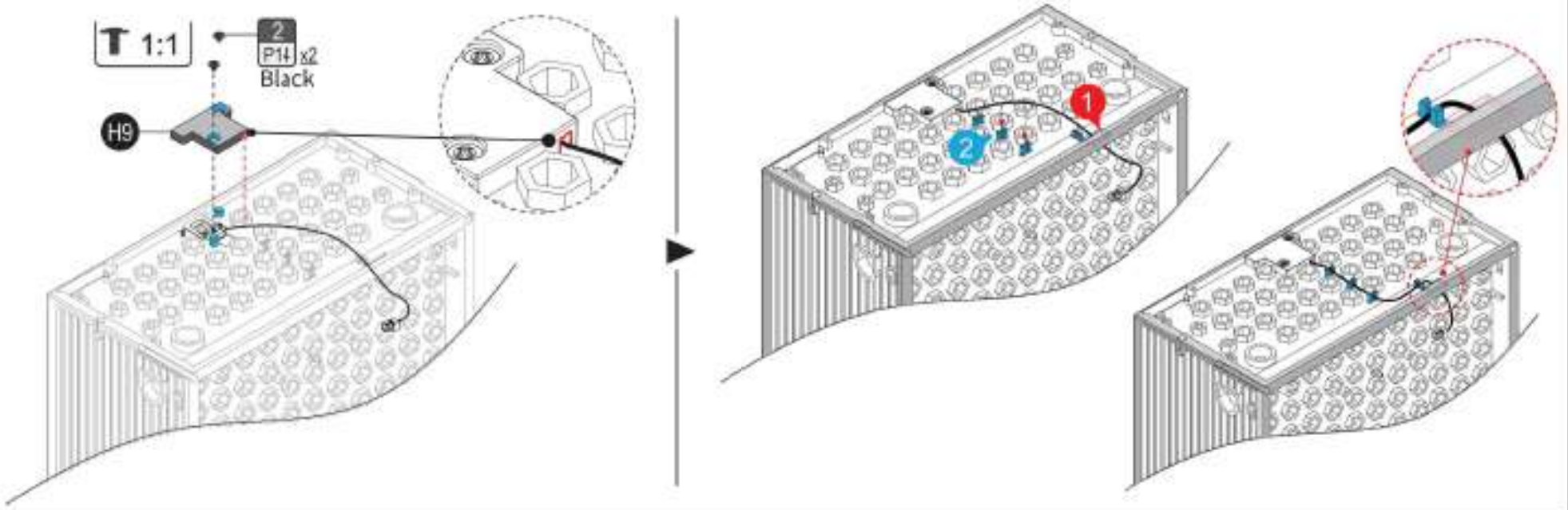

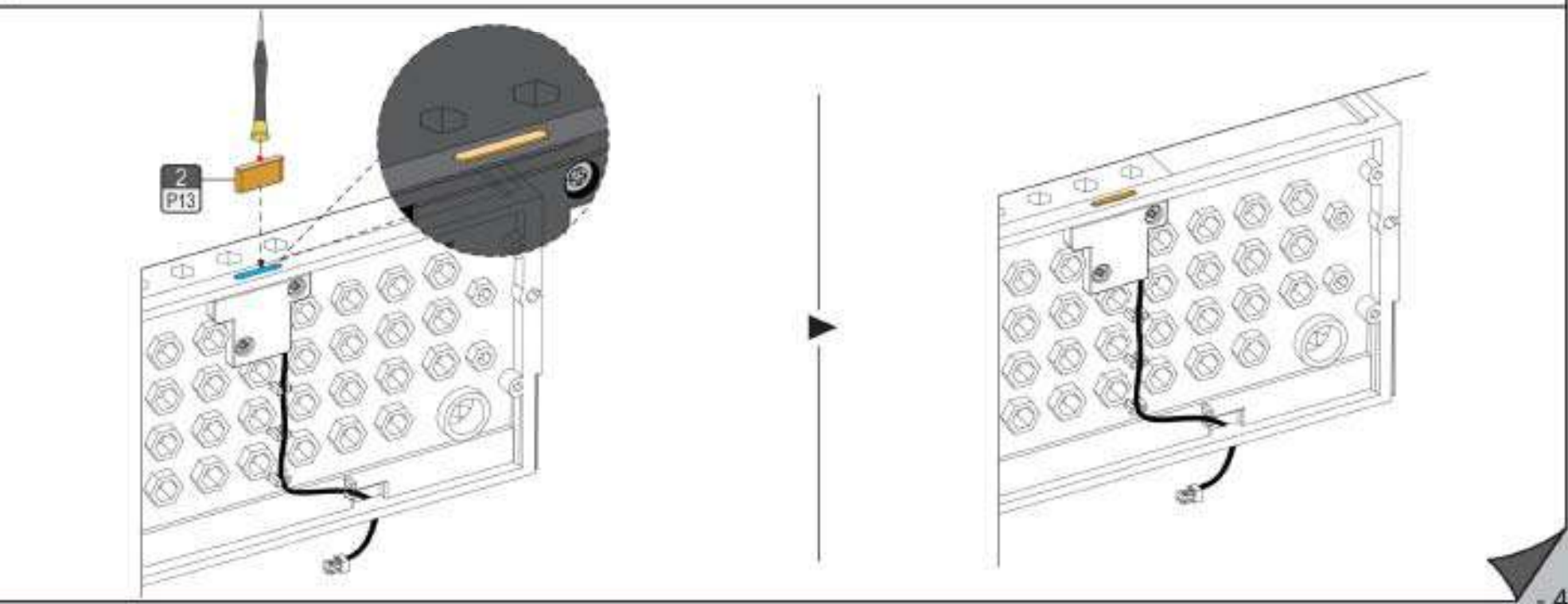

2 Completion

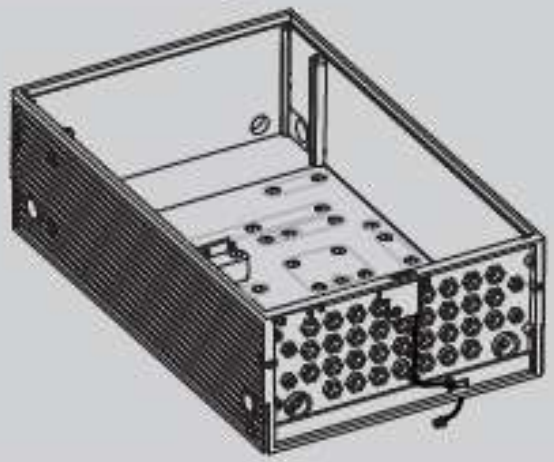

2 Notice before assembling:

<1>

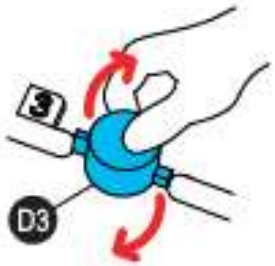

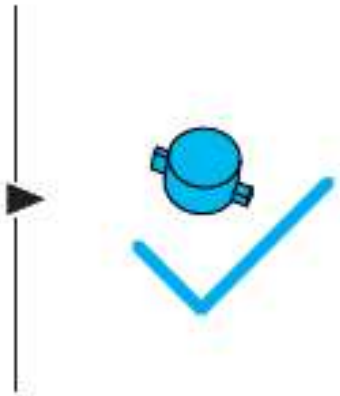

Some parts can be hand-removed to avoid excessive cutting. When you see the icon , rotate the part by hand to remove it.

Basic Play

(Assembly instruction for A)

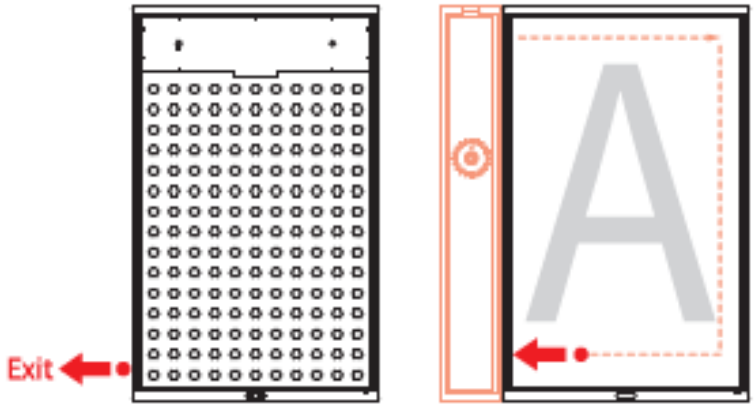

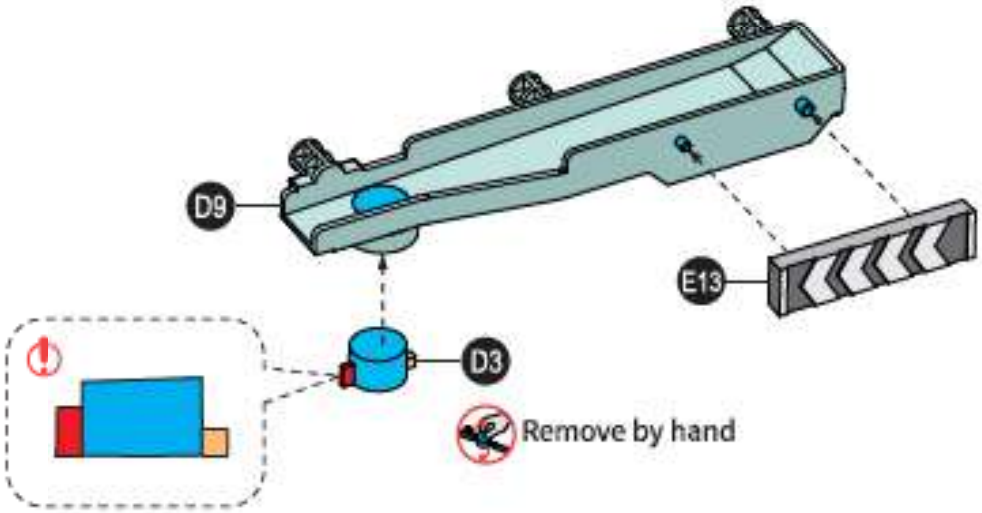

2

<2>

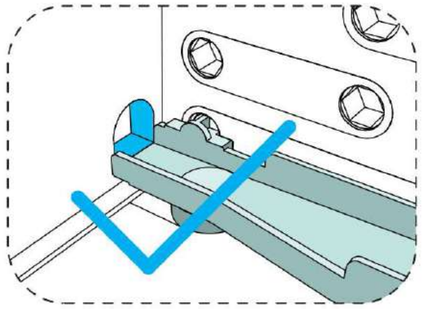

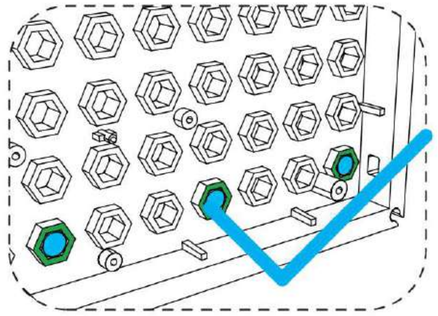

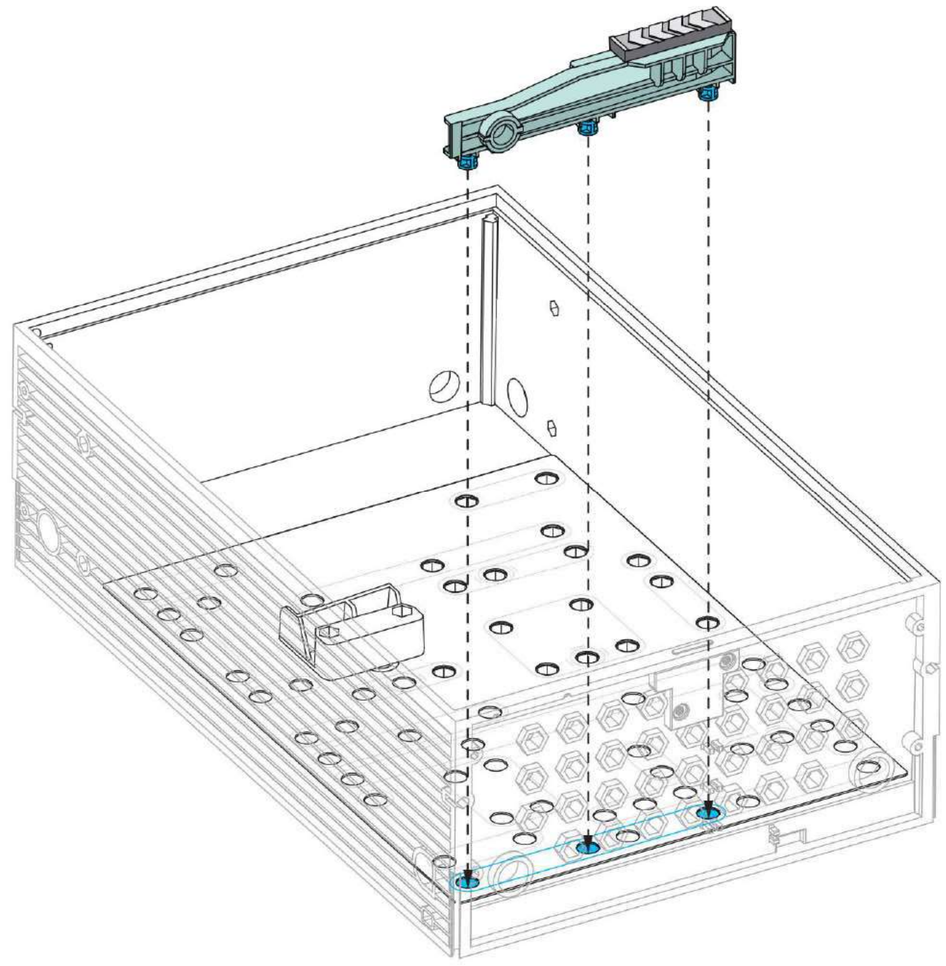

Advanced Play - Module Extension

(Skip it if not needed.)

(Assembly instruction for B)

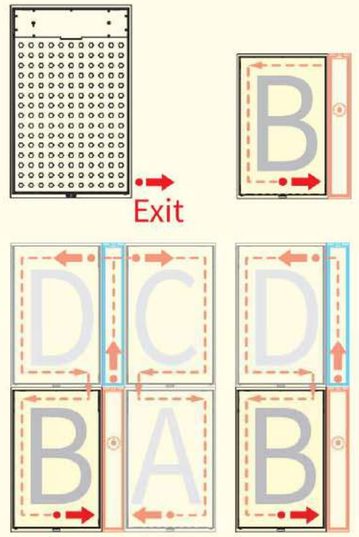

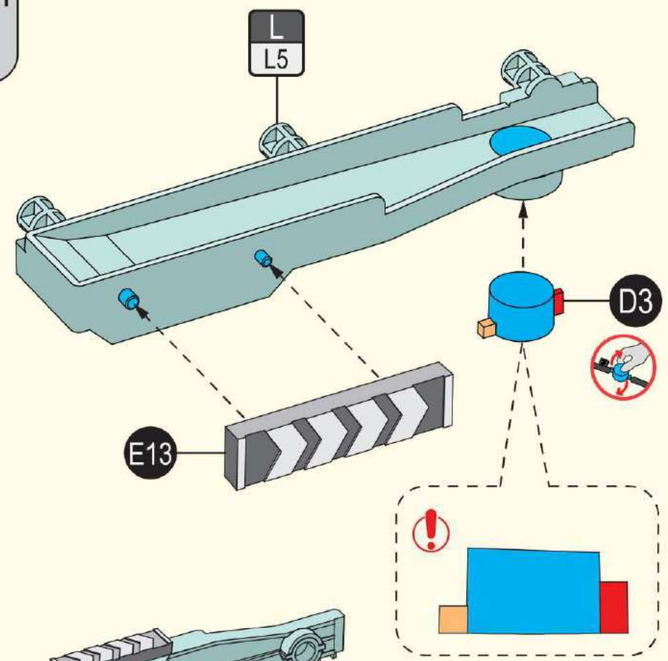

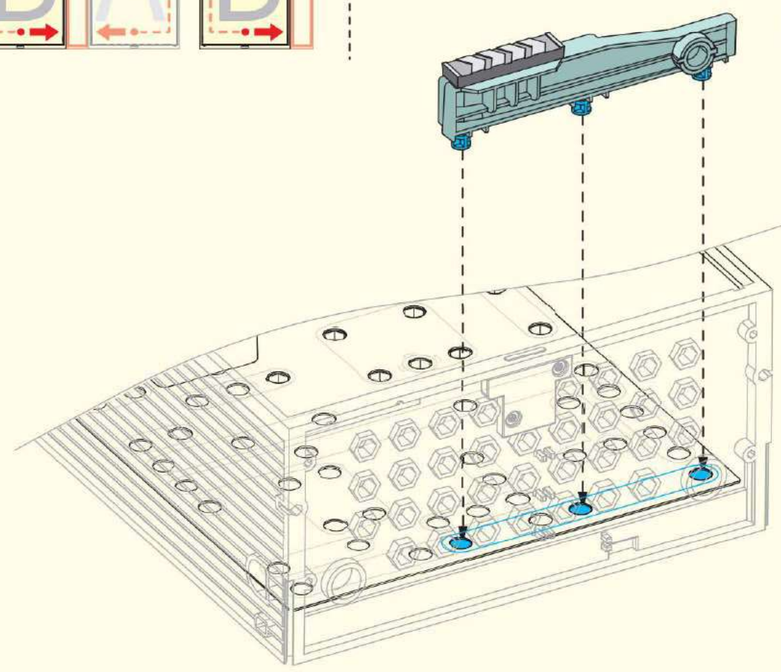

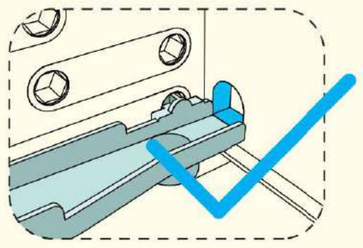

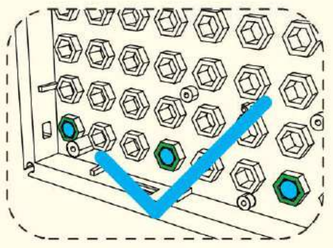

Advanced Play - Module Extension
(Skip it if not needed.)
(Assembly instruction for C)

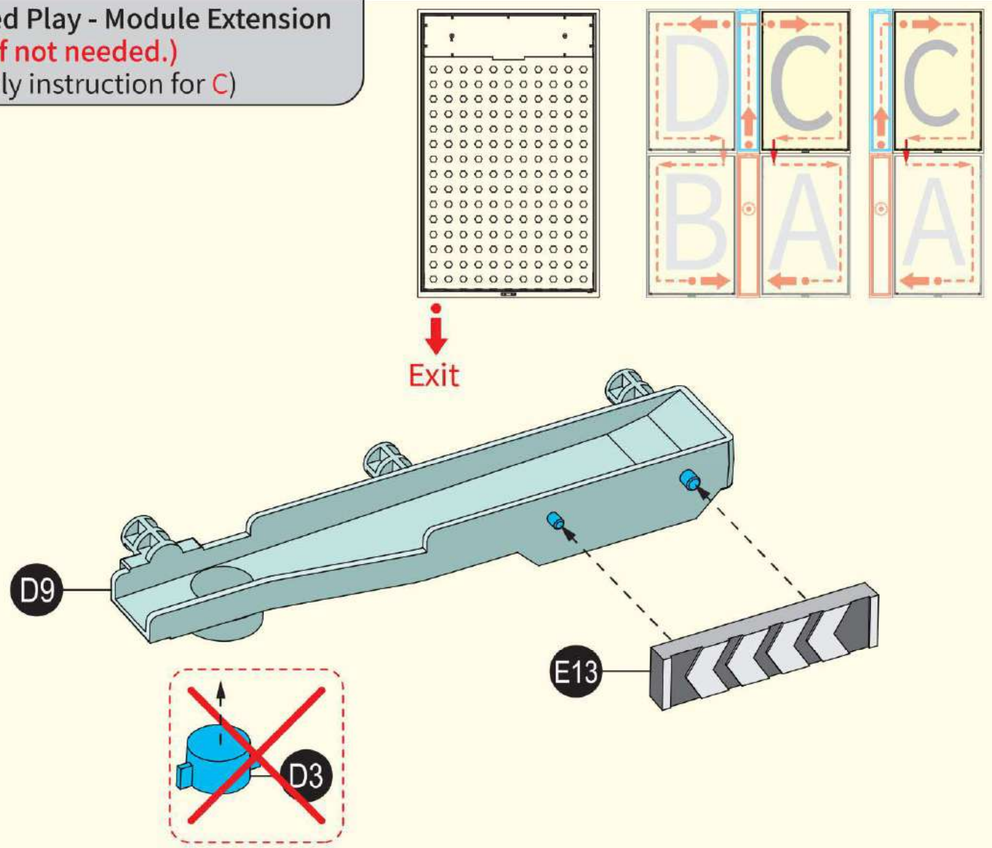

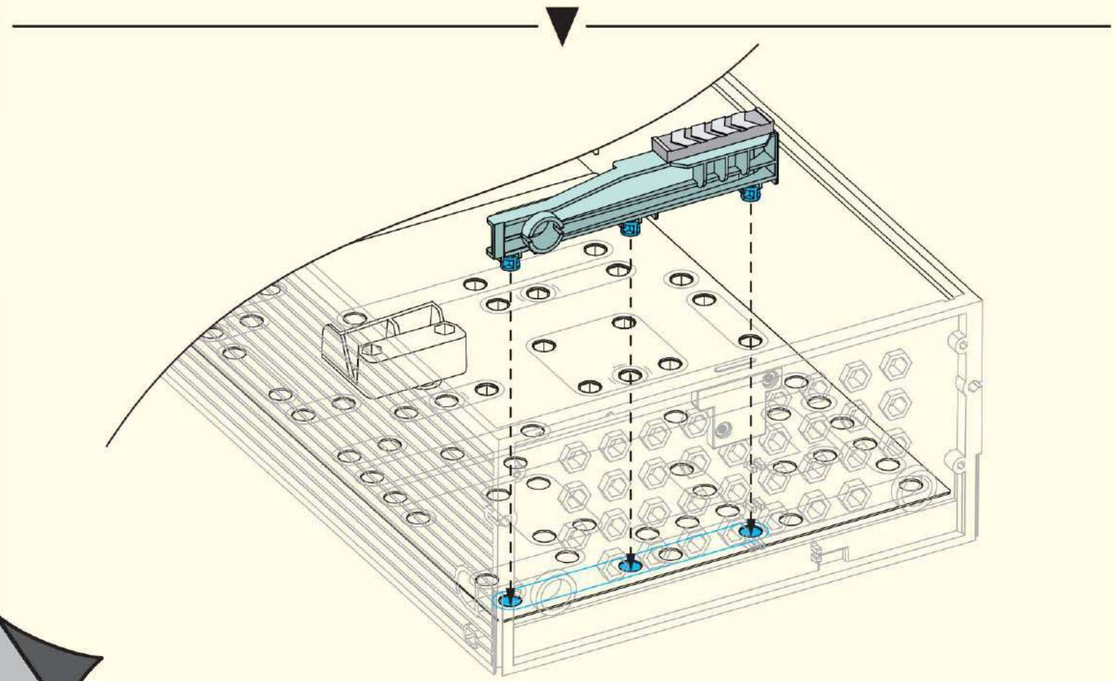

Advanced Play - Module Extension
(Skip it if not needed.)
(Assembly instruction for D)

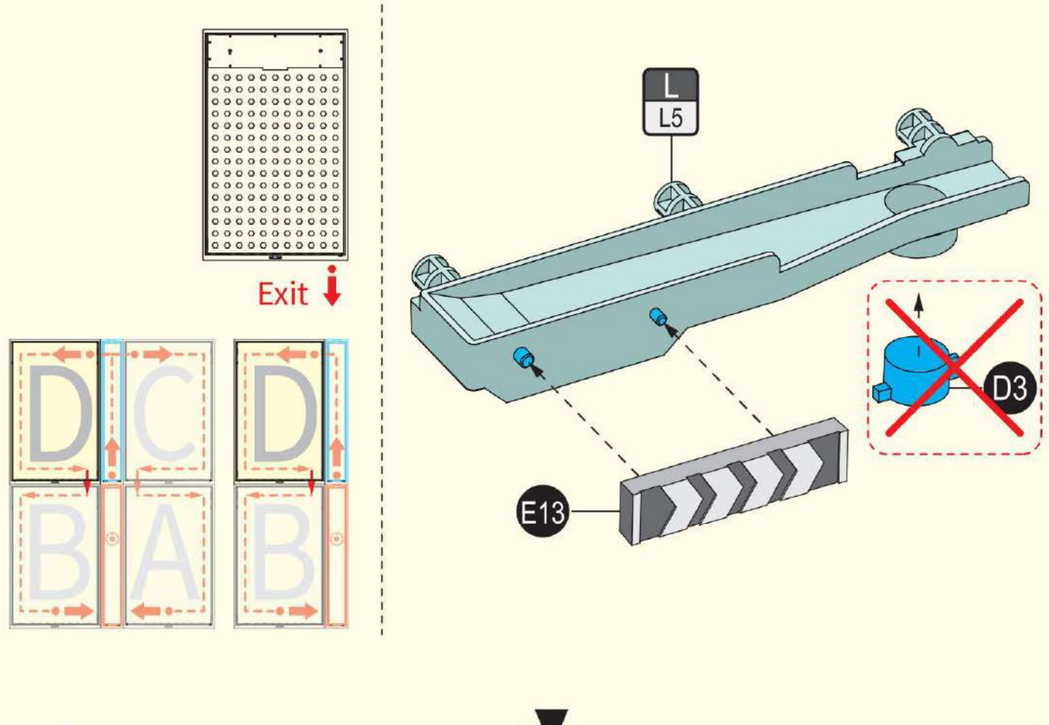

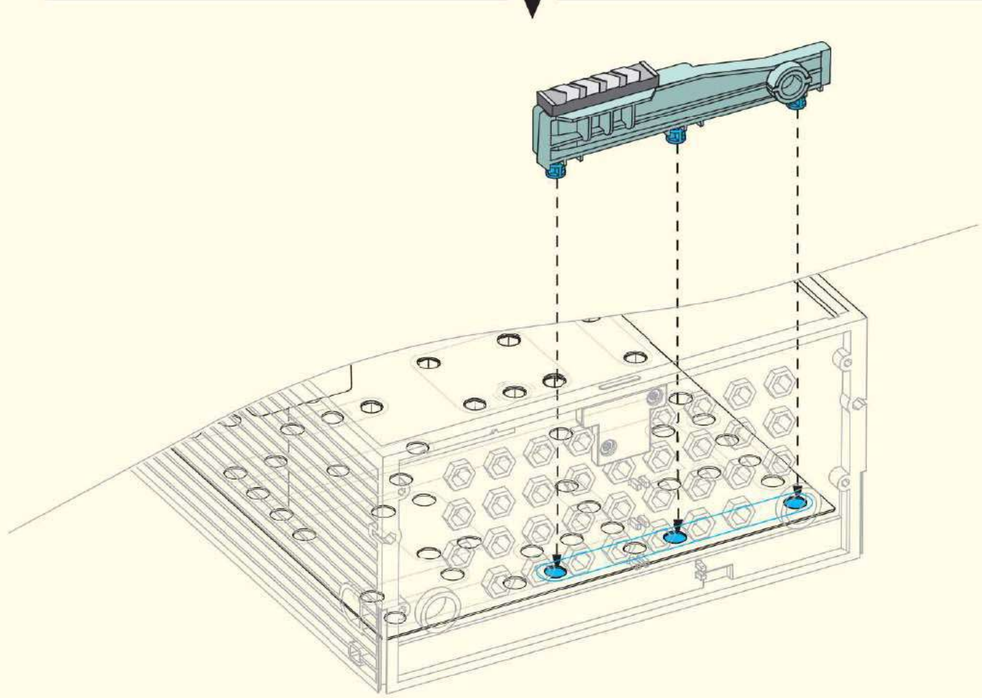

2

<3>

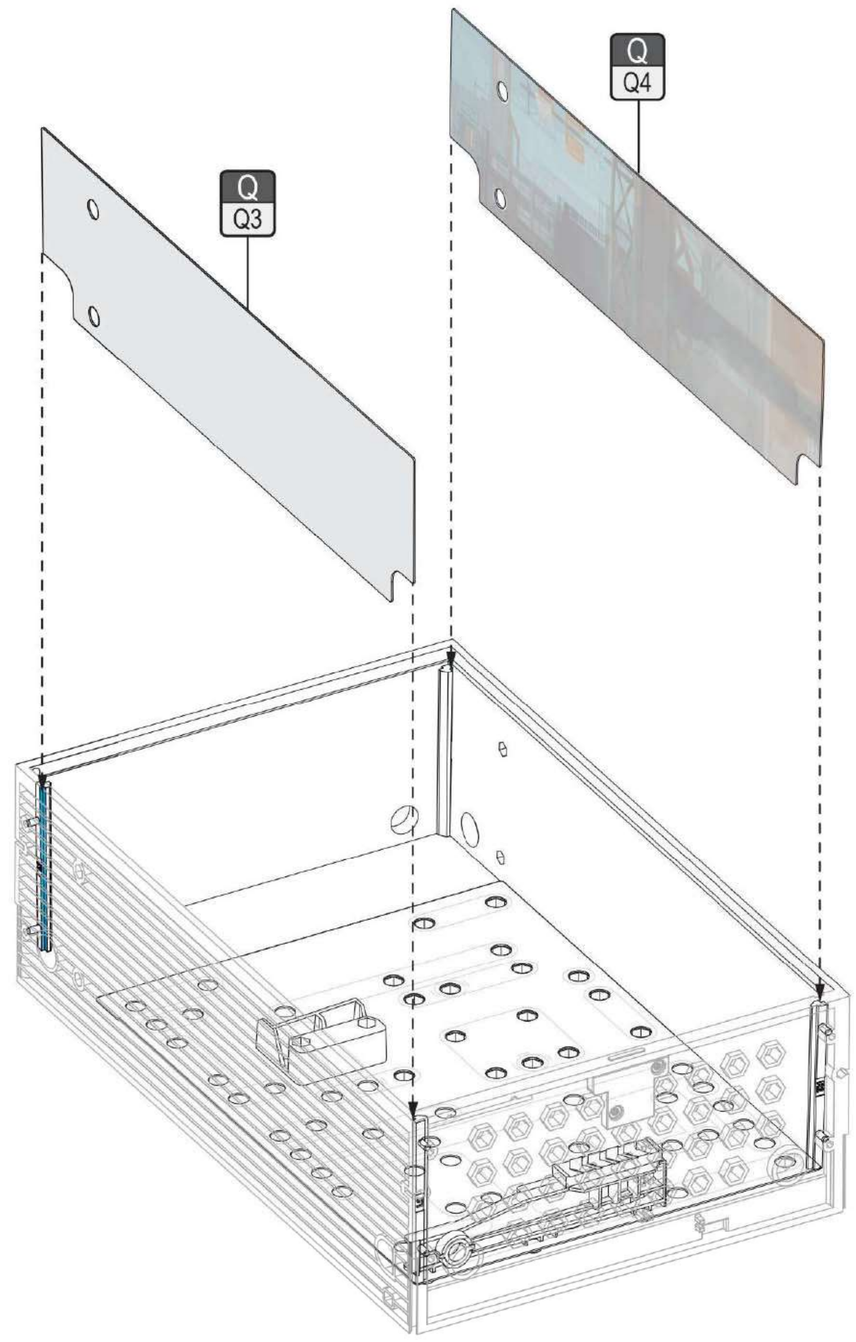

2

<4>

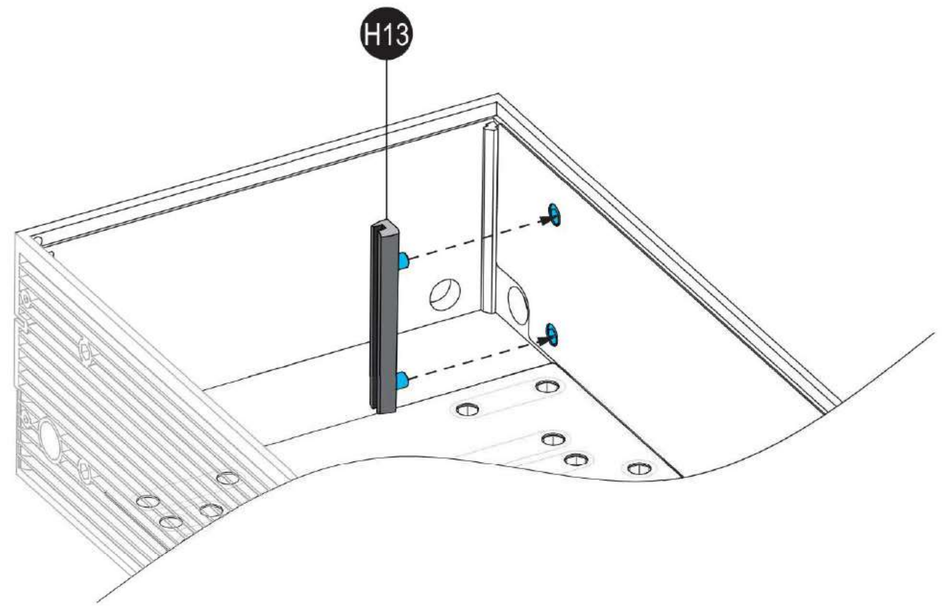

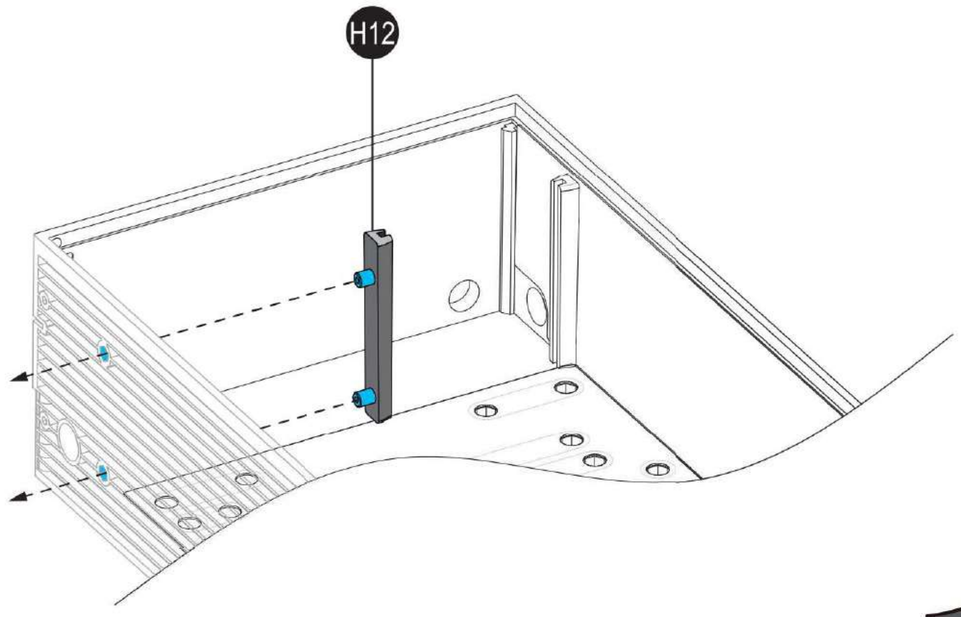

3 Completion

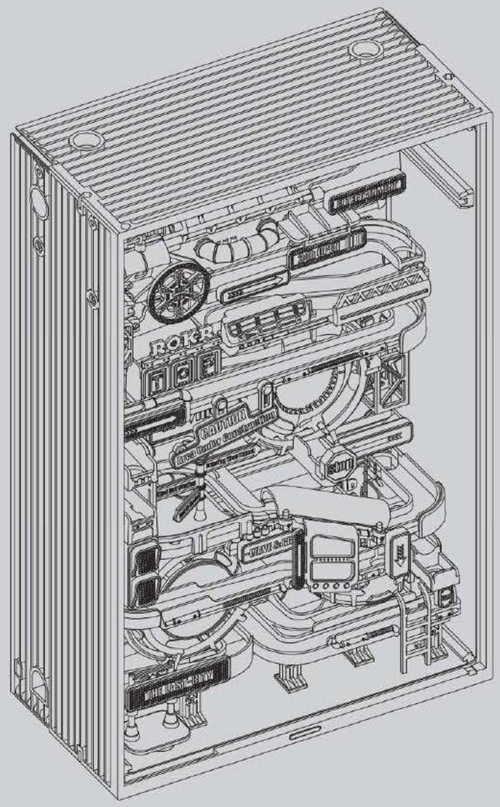

3

<1>

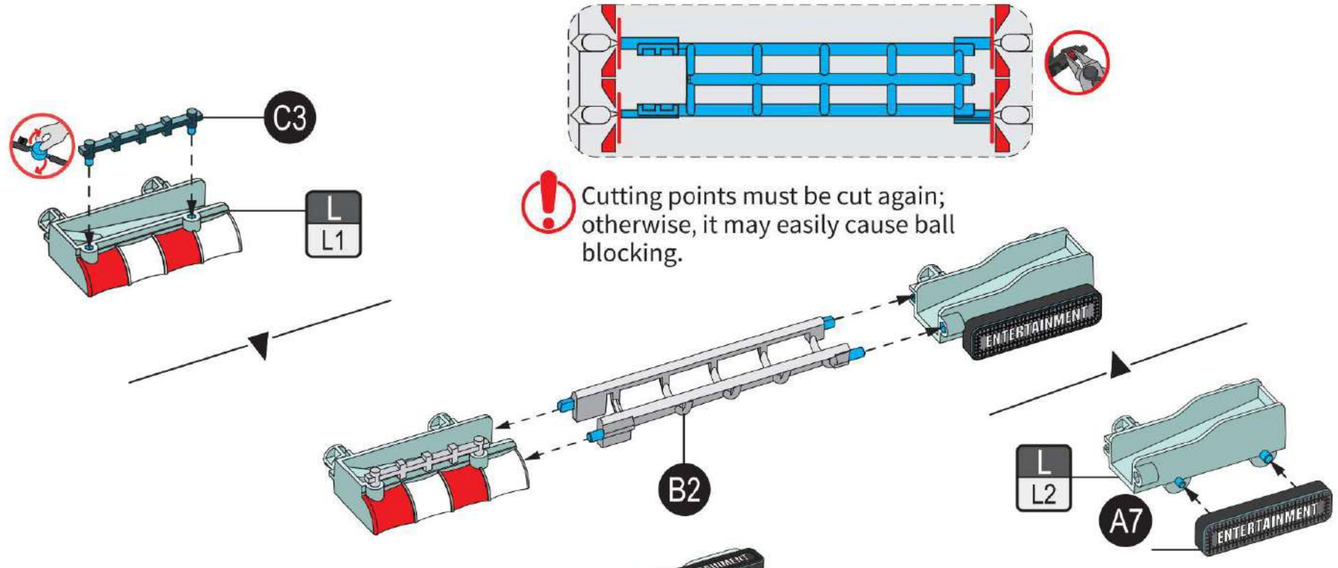

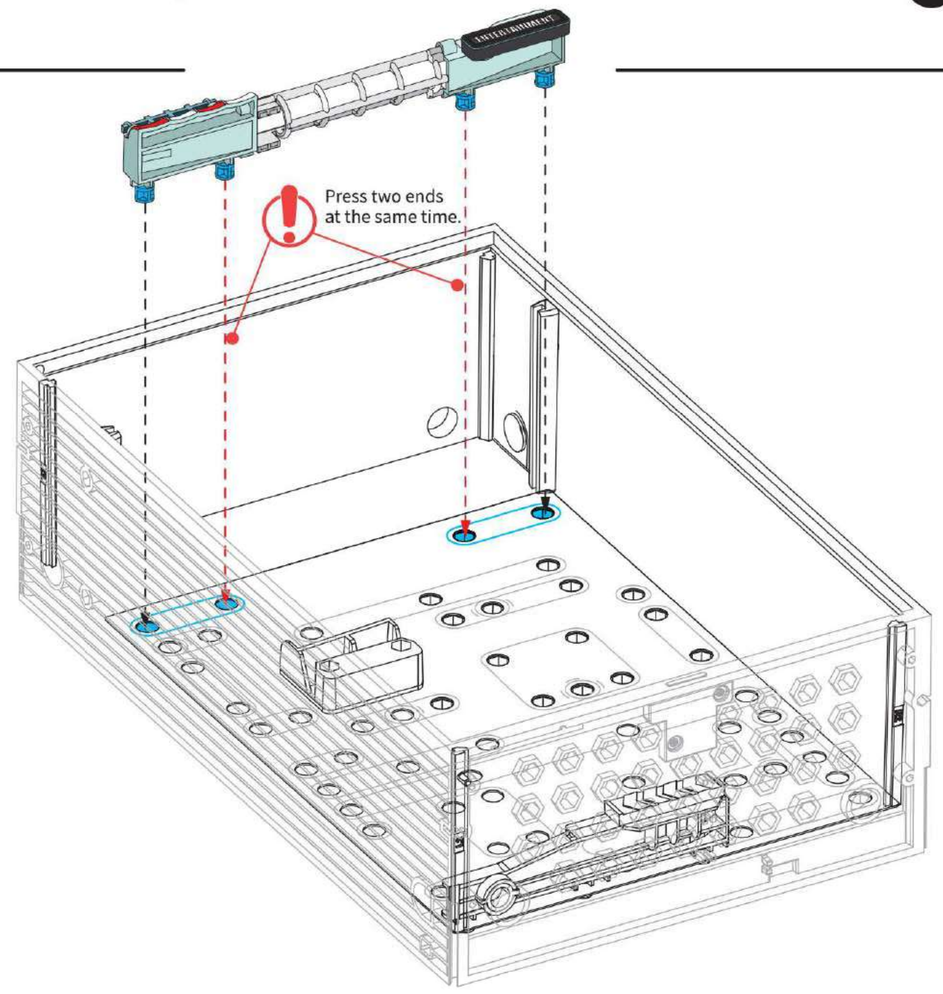

3

<2>

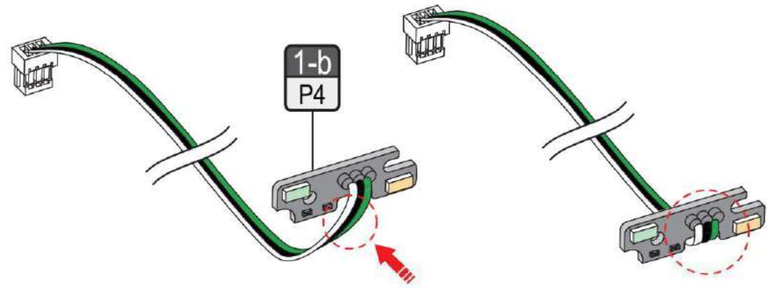
1-b
P4

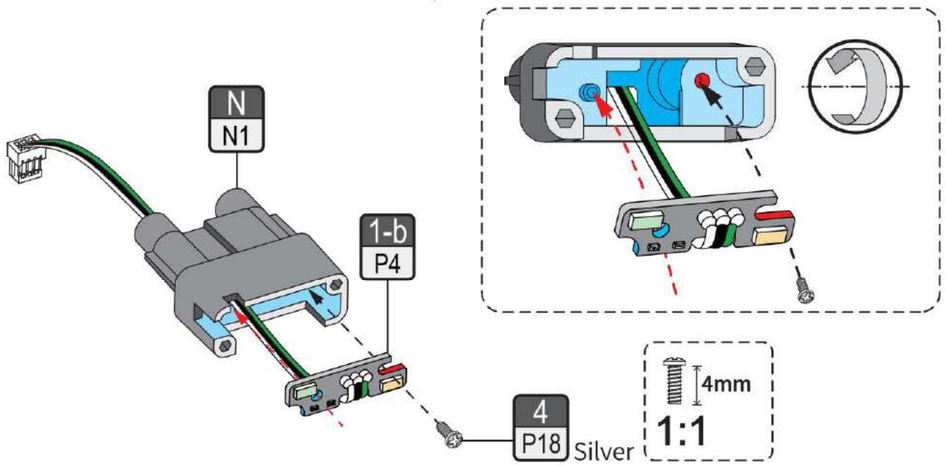
N
N1
1-b
P4
4
P18
Silver
4mm
1:1

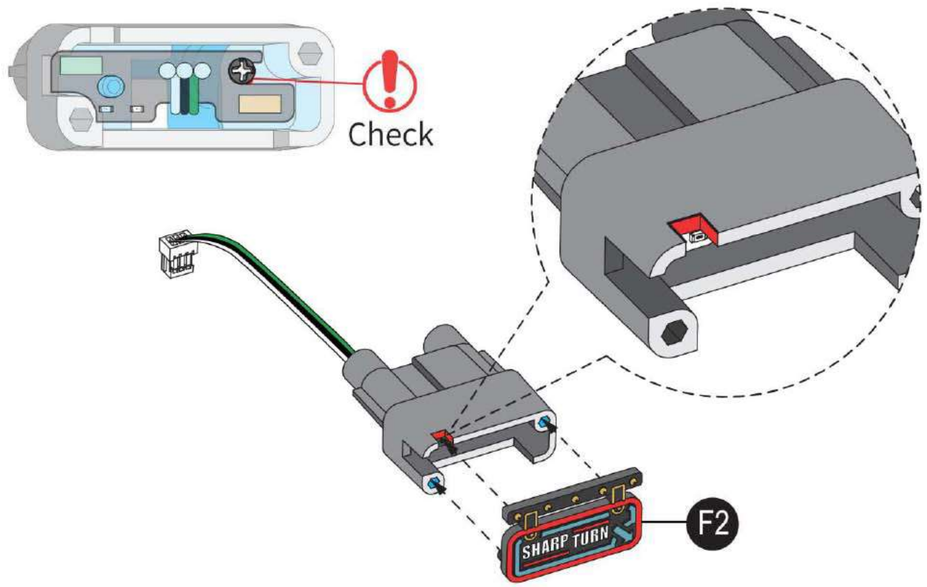
Check
F2
SHARP TURN

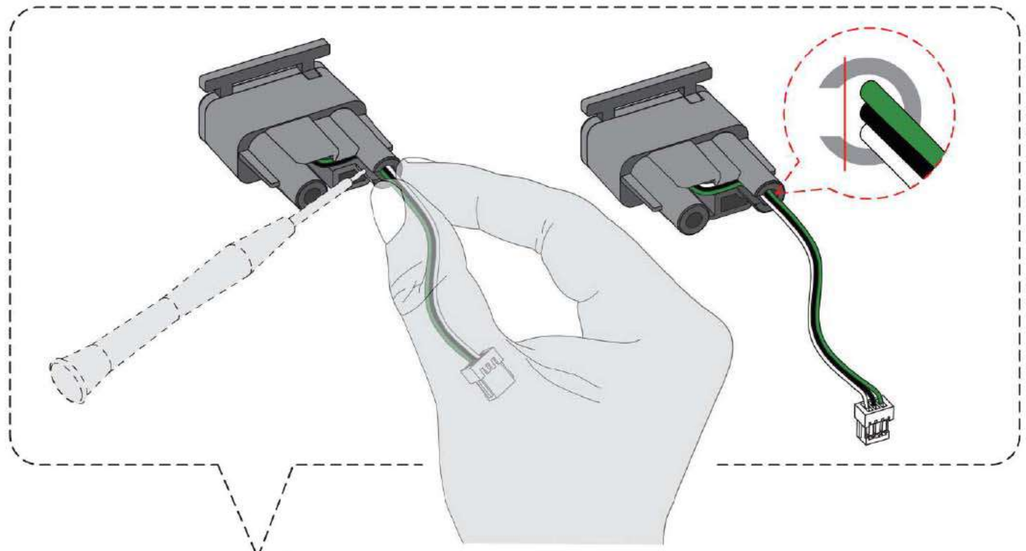

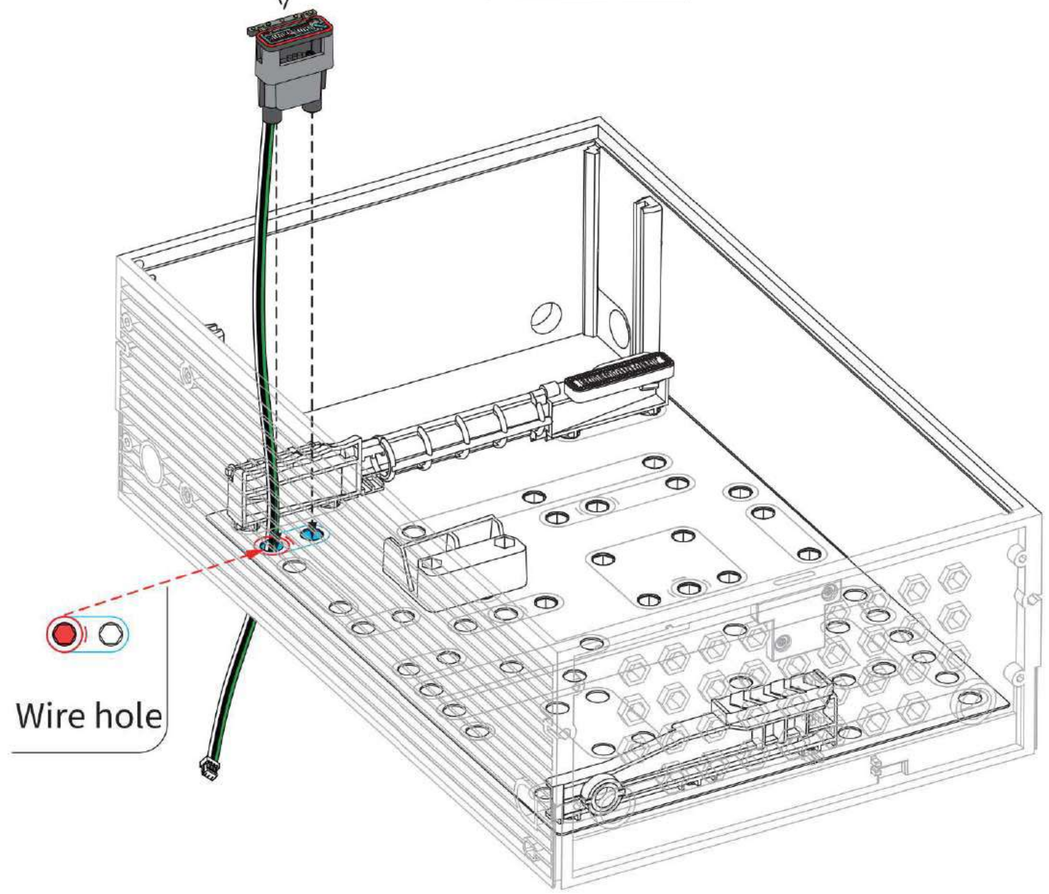
Wire hole

3

<3>

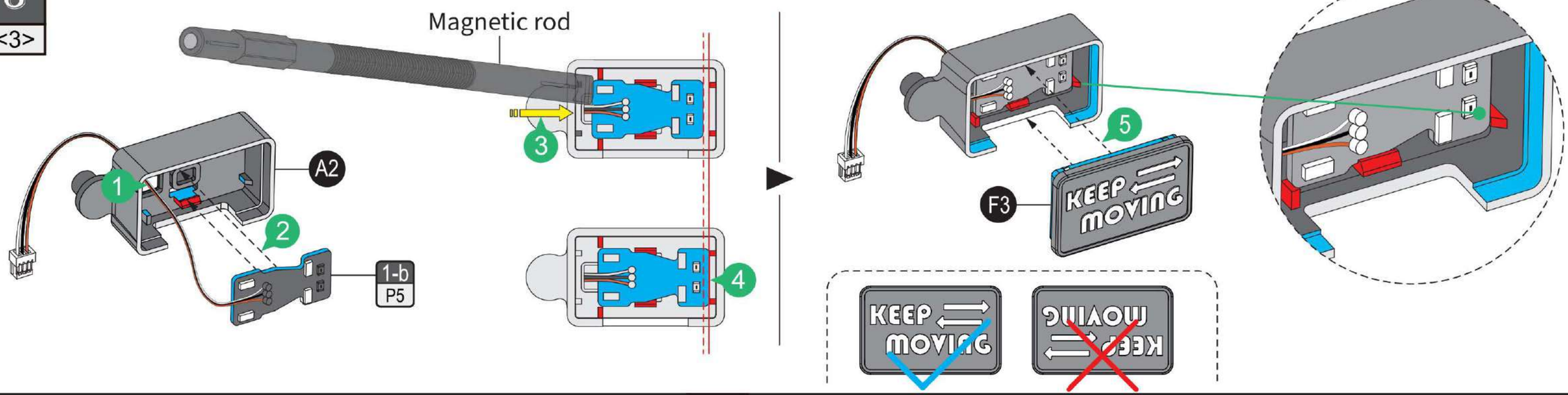
Magnetic rod
A2
1
2
1-b
P5
3
4
5
F3
KEEP MOVING

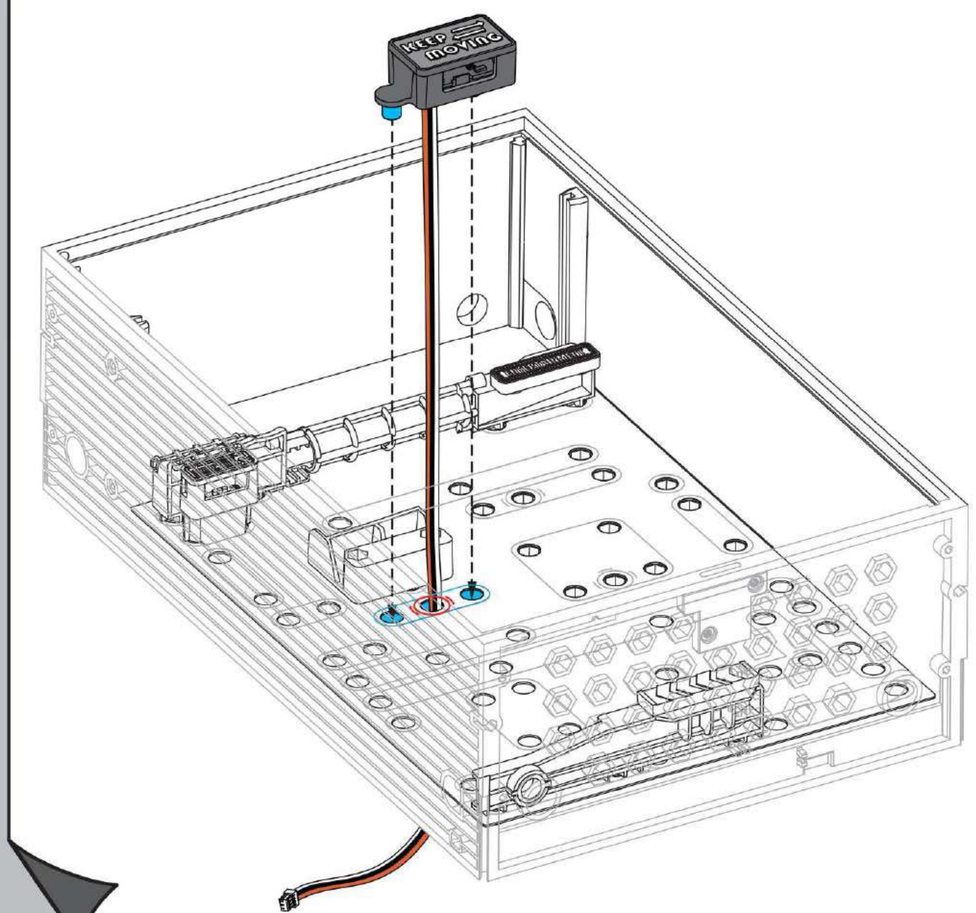
KEEP MOVING

3

<4>

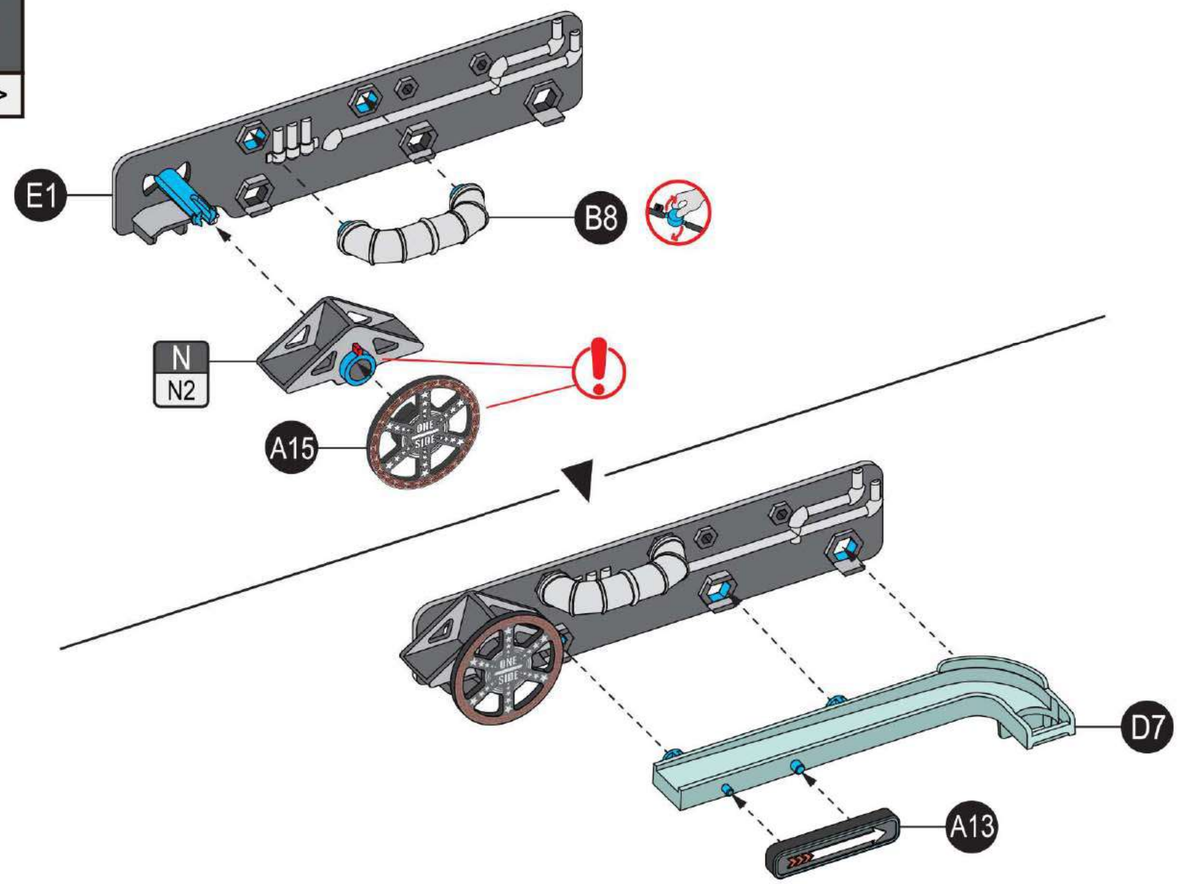
E1
B8
N
N2
A15
D7
A13

Tips before assembling:

When cutting, make sure the pliers fit tightly to the parts.

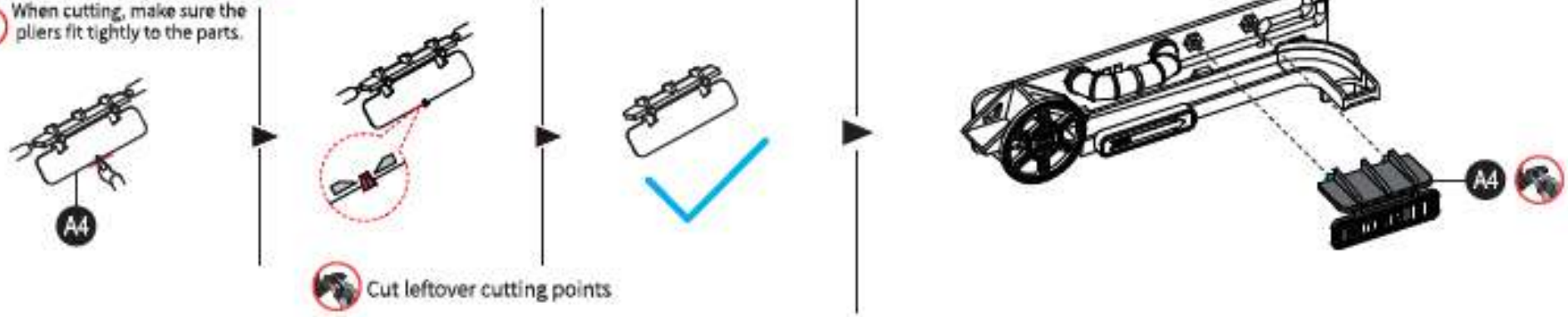

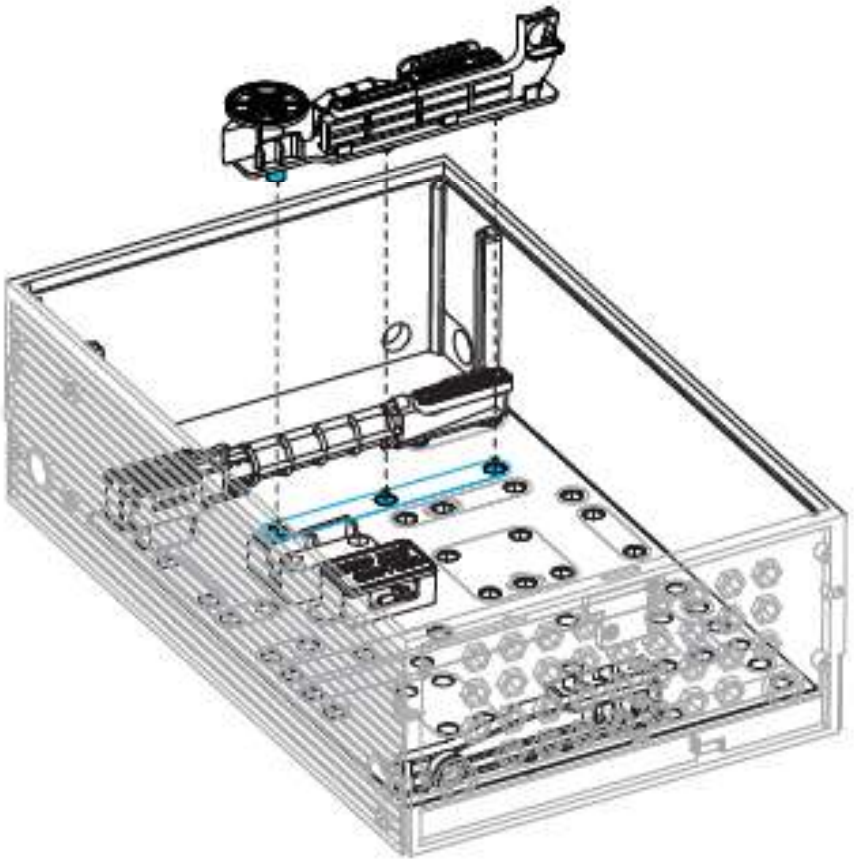

3

<5>

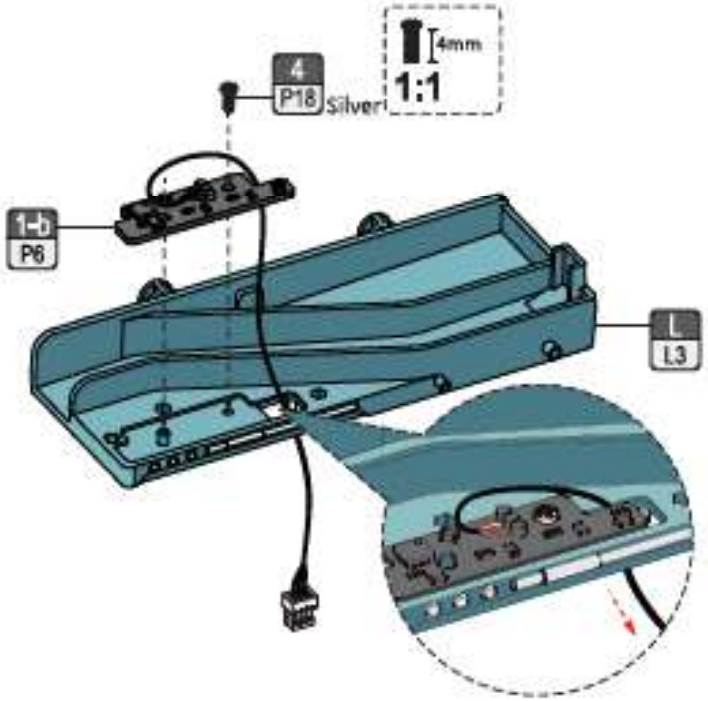

Arrange the wire as shown.

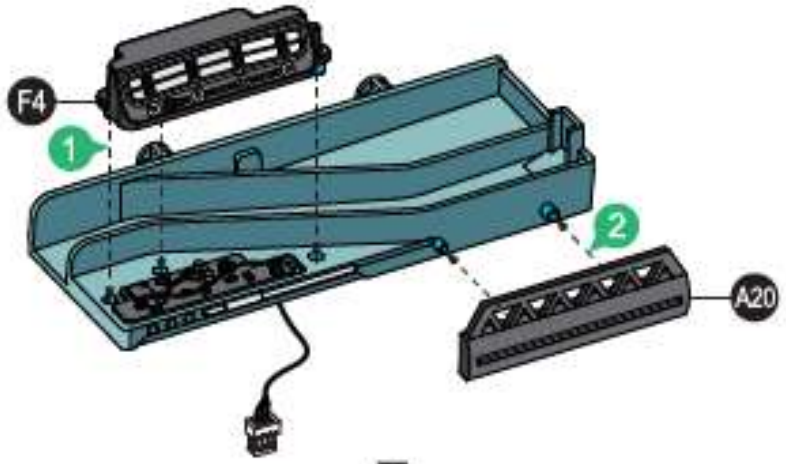

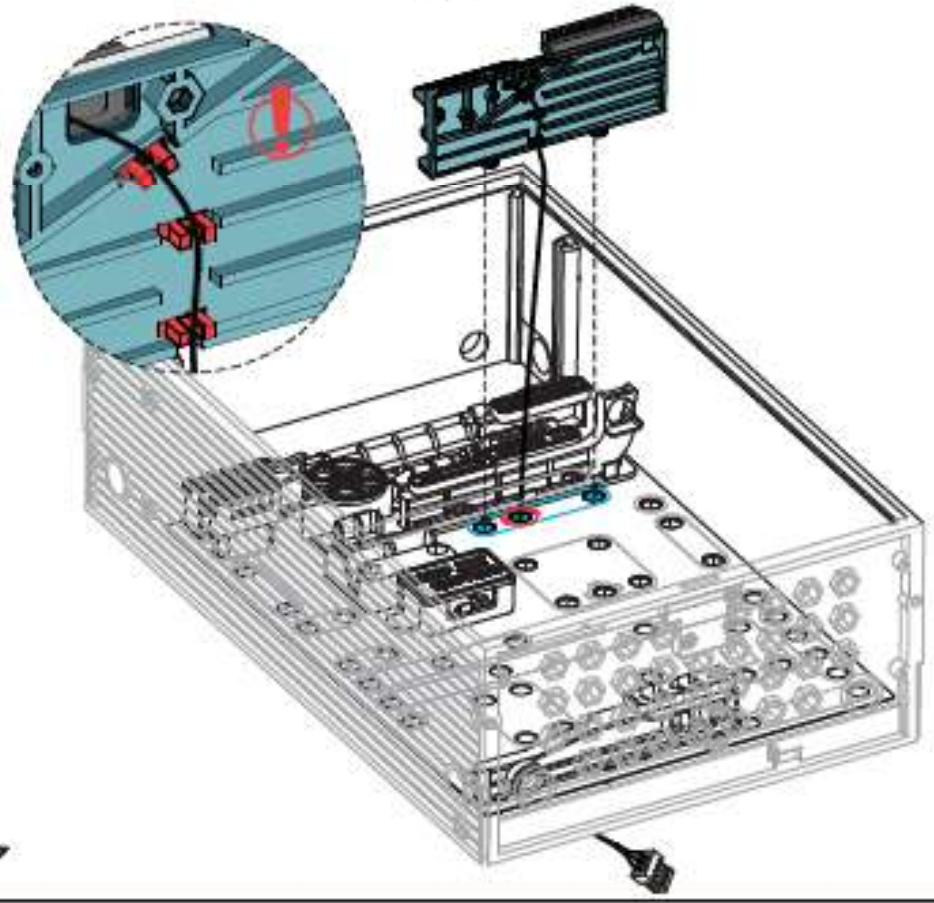

3
<6>

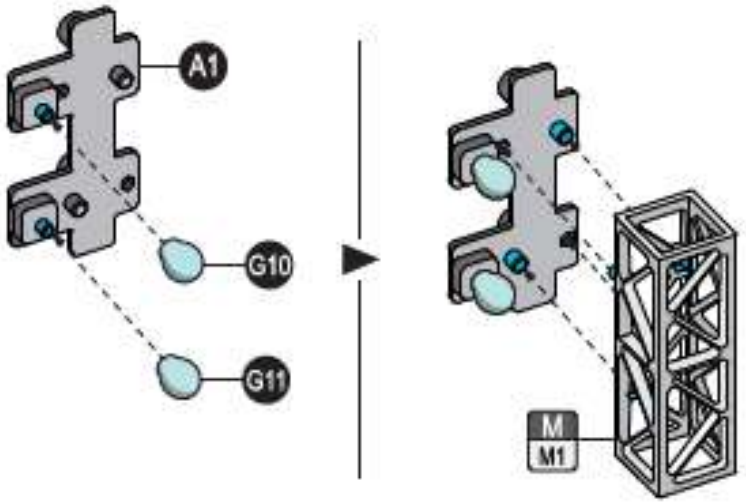

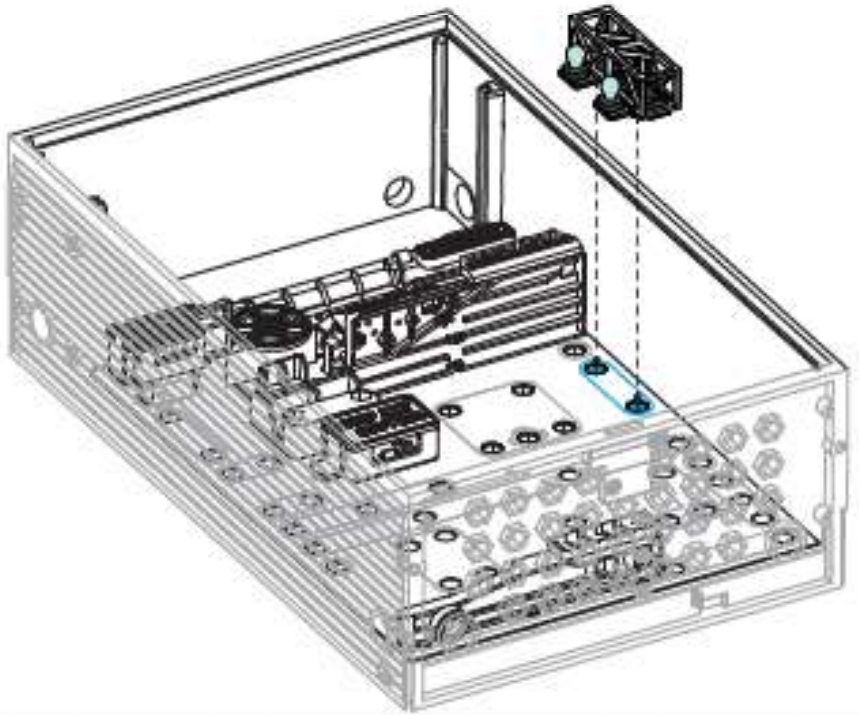

3

<7>

3
P16
White sticker

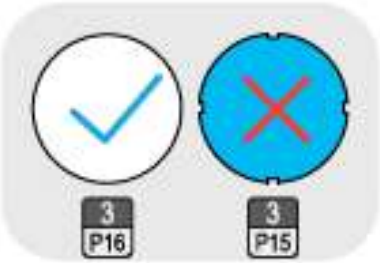
3
P16
3
P15

E11
Stick

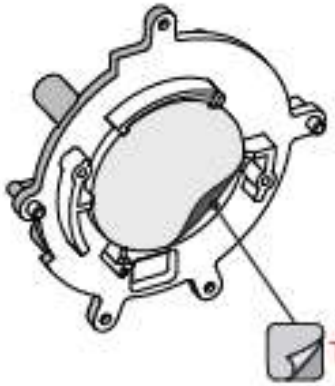
Transparent film

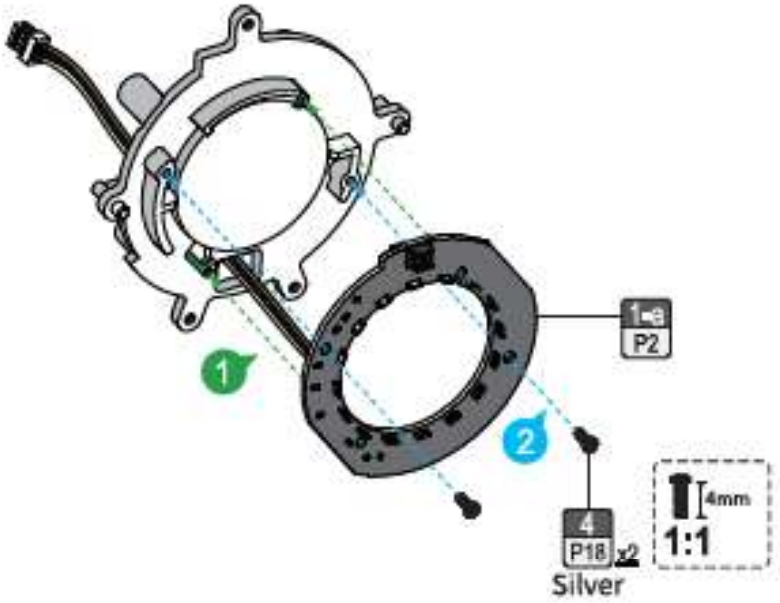
1-e
P2
1
2
4
P18 x2
Silver
4mm
1:1

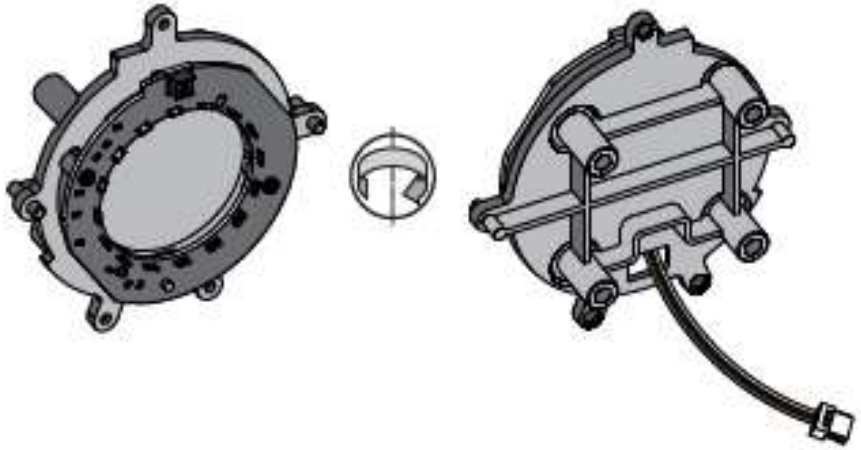

3

<8>

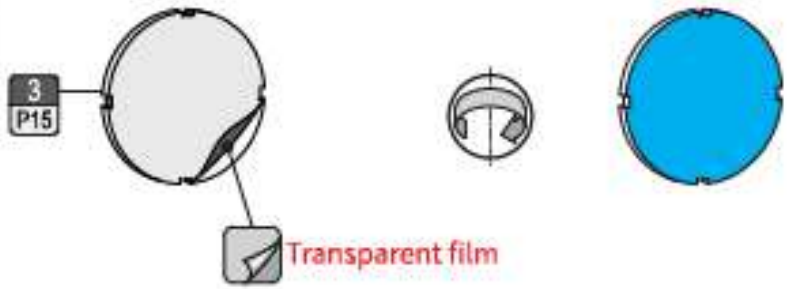
3
P15
Transparent film

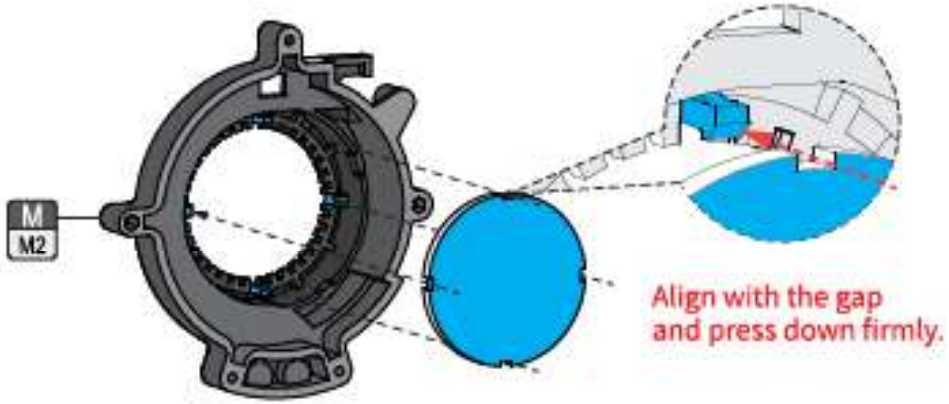
M
M2
Align with the gap
and press down firmly.

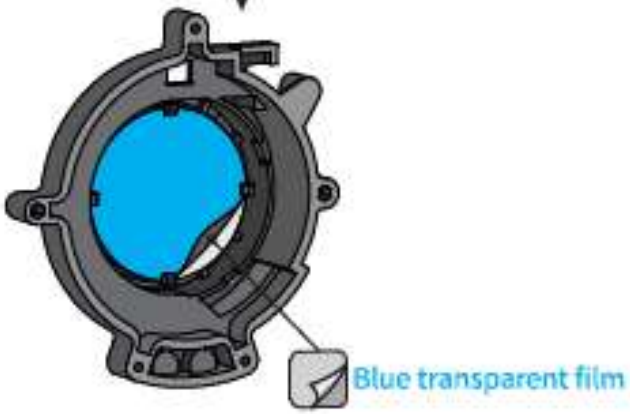
Blue transparent film

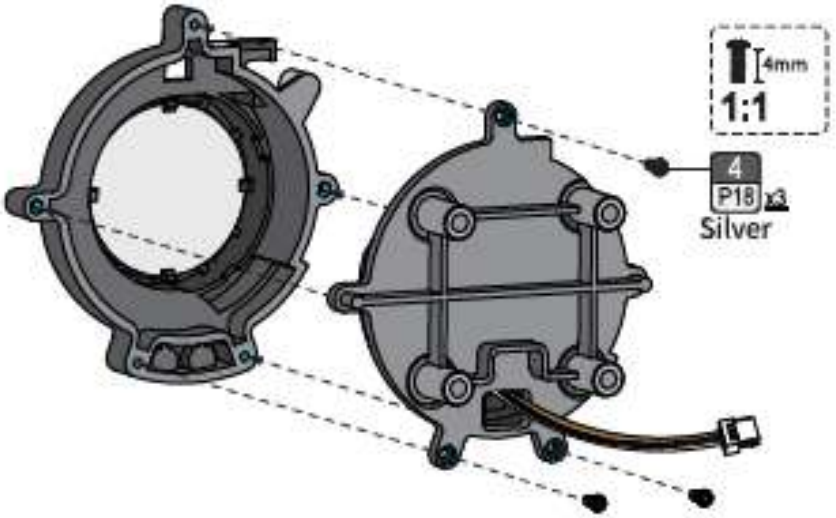
4mm
1:1
4
P18
Silver

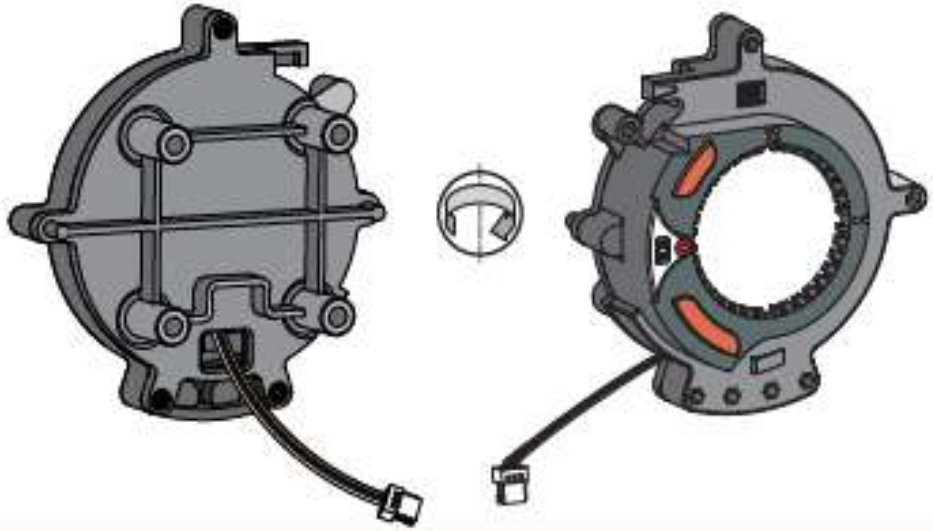

3

<9>

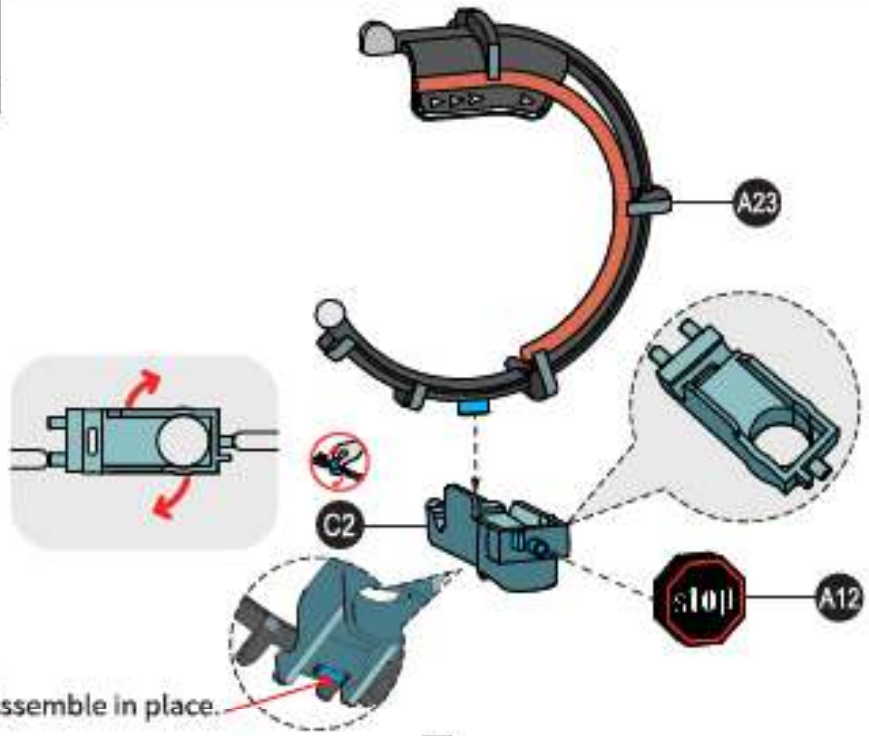
A23
C2
stop
A12
Assemble in place.

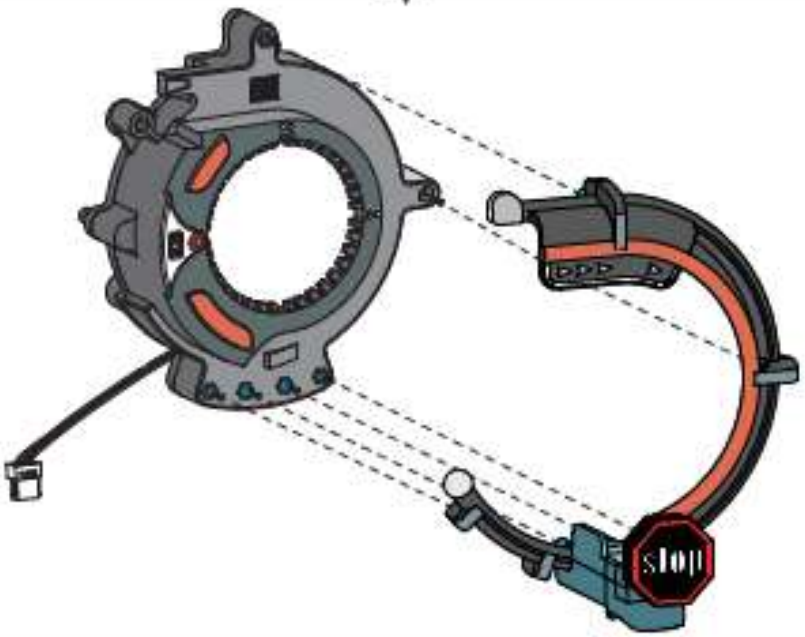
stop

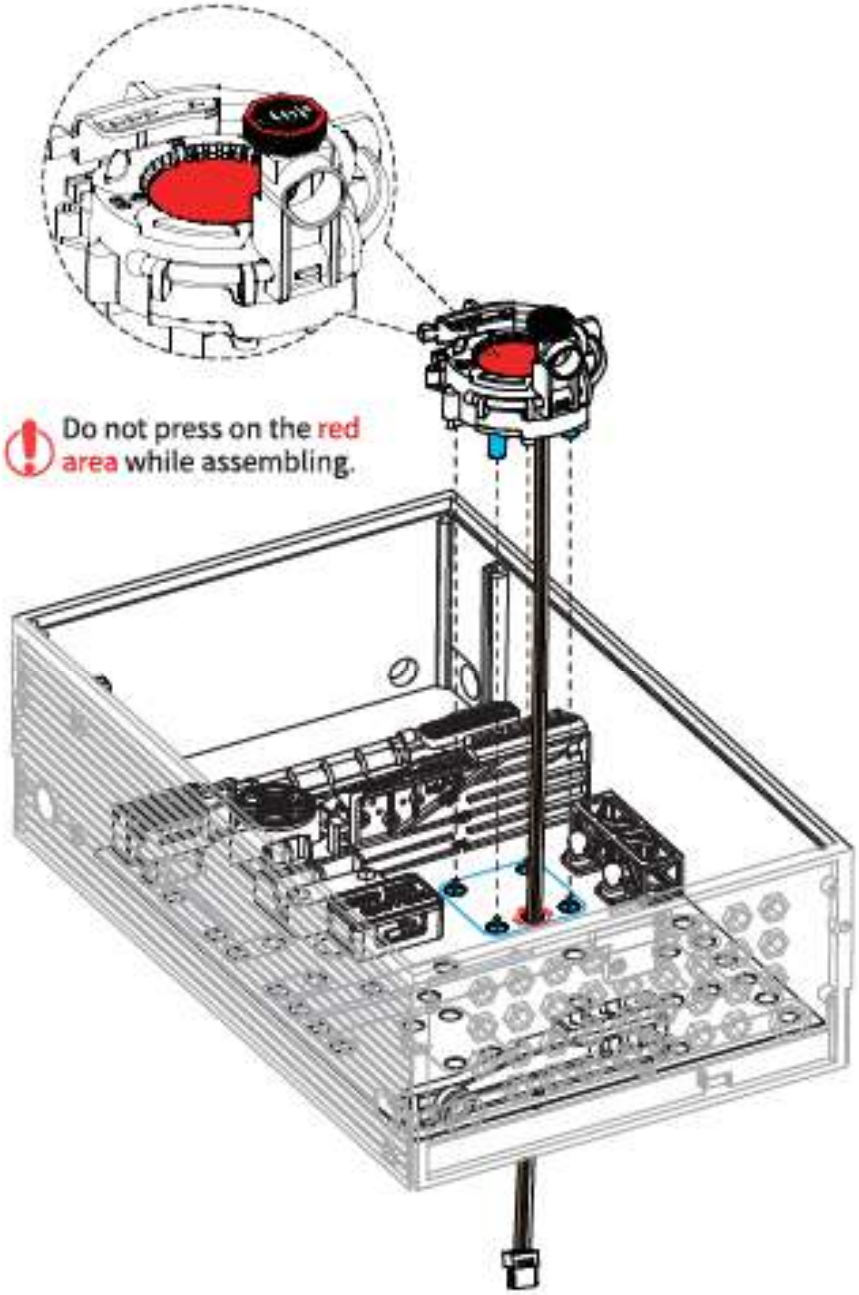
Do not press on the red area while assembling.

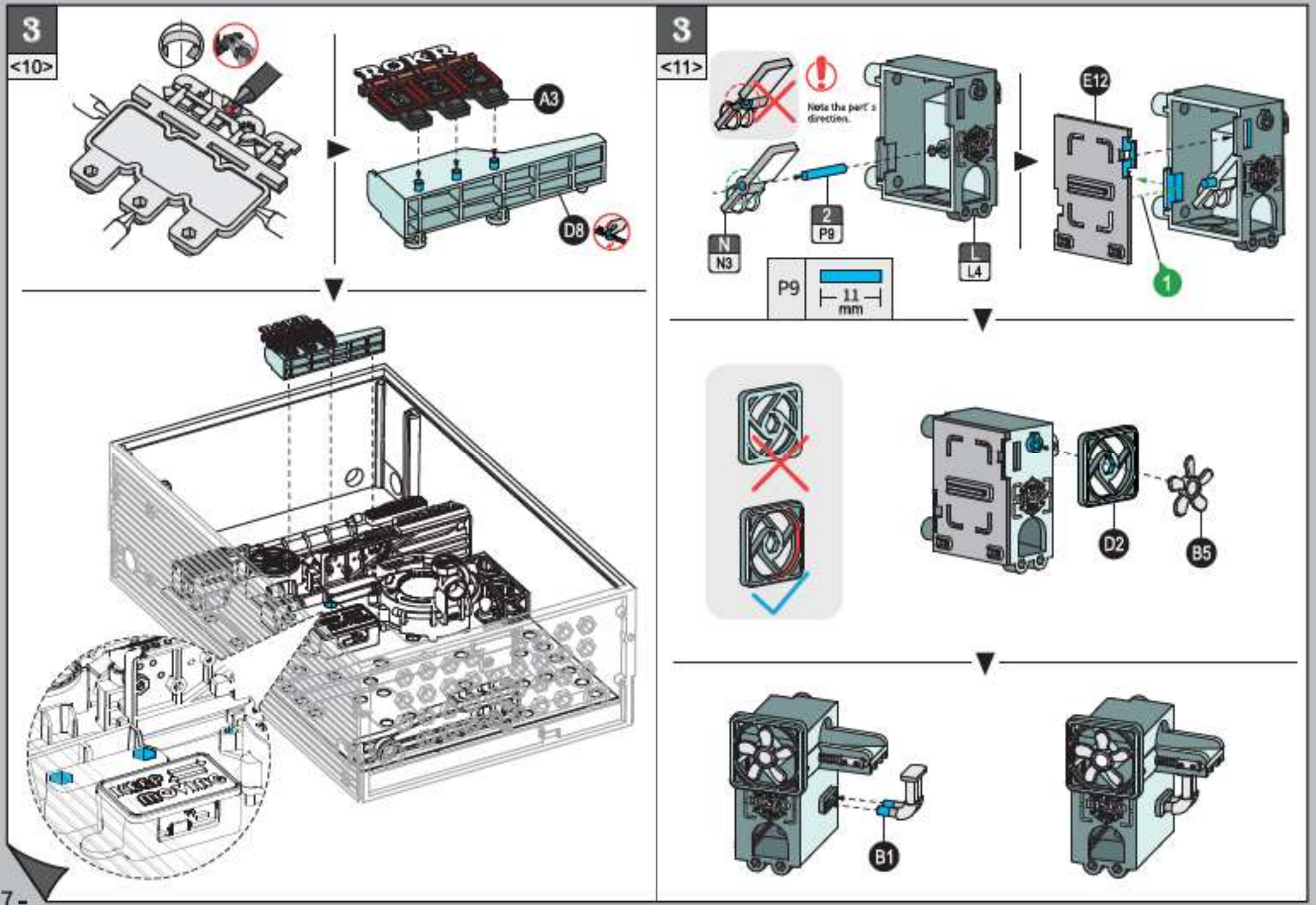
3
<10>
A3
D8
3
<11>
Note the part's directions.
2
P9
N
N3
L
L4
P9
11
mm
E12
1
D2
B5
B1

3

<12>

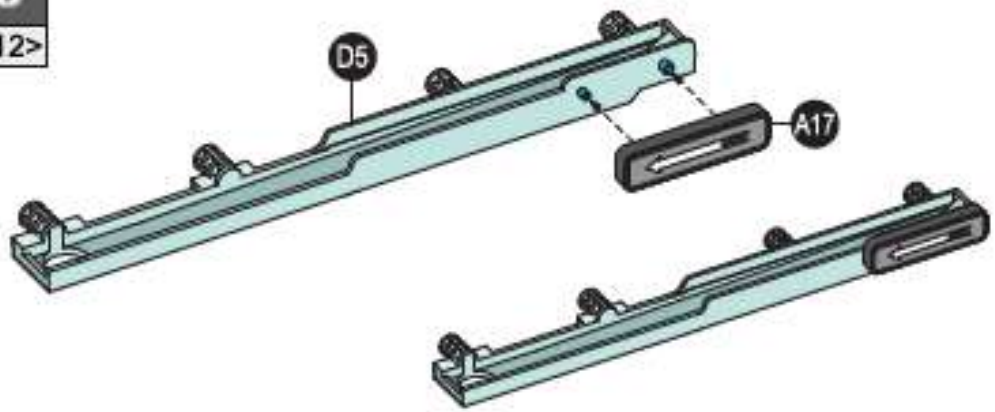

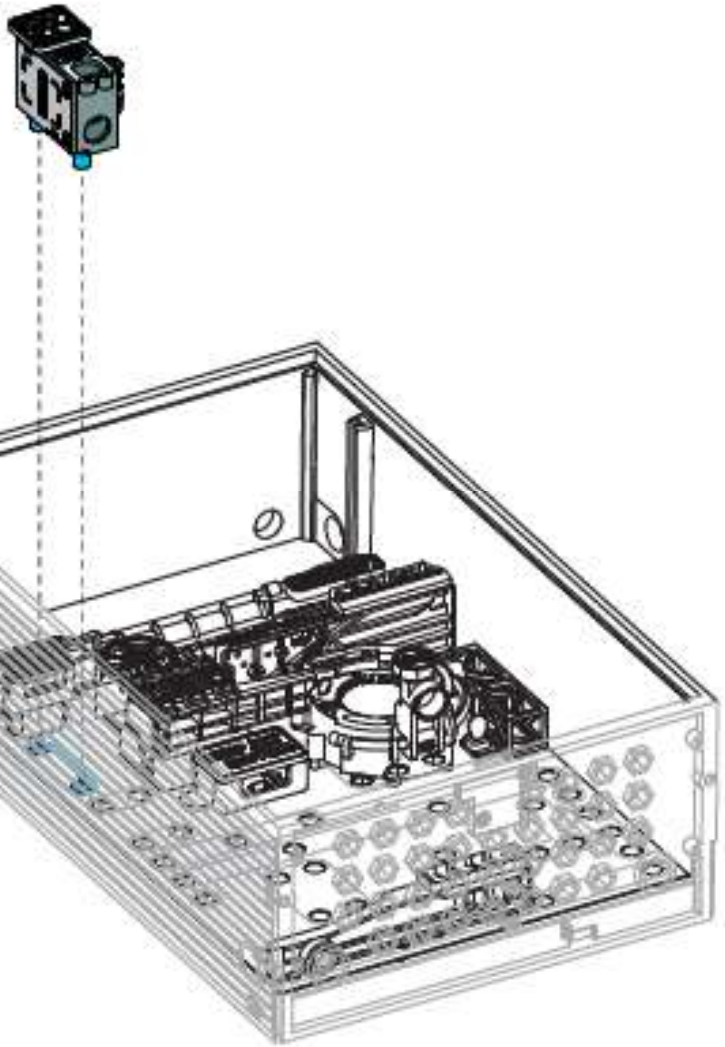

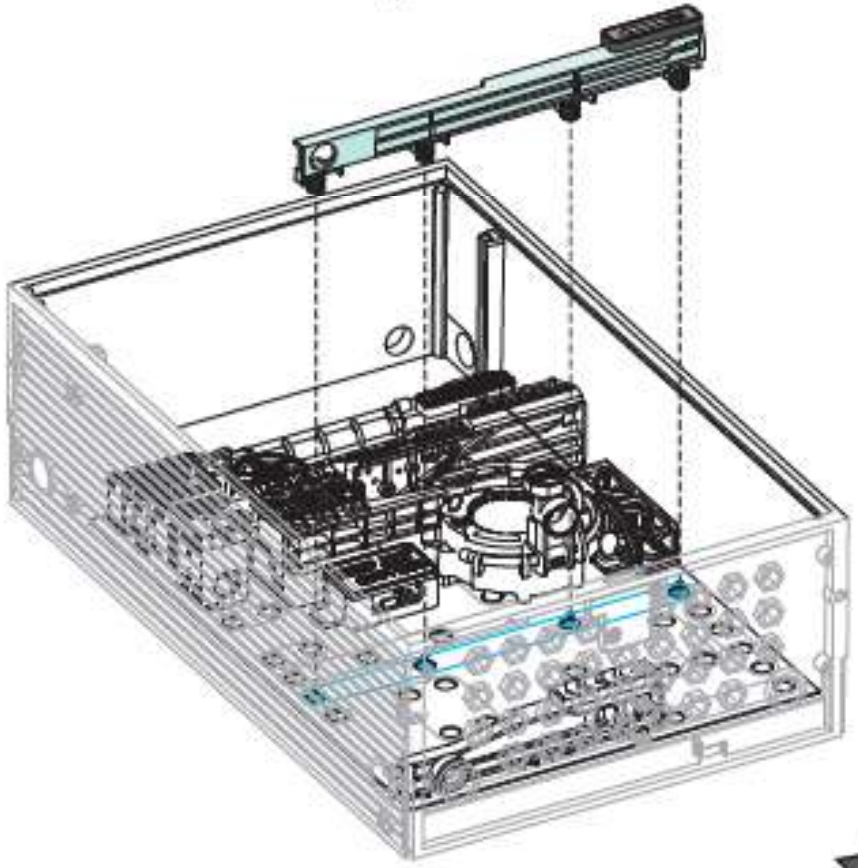

3

<13>

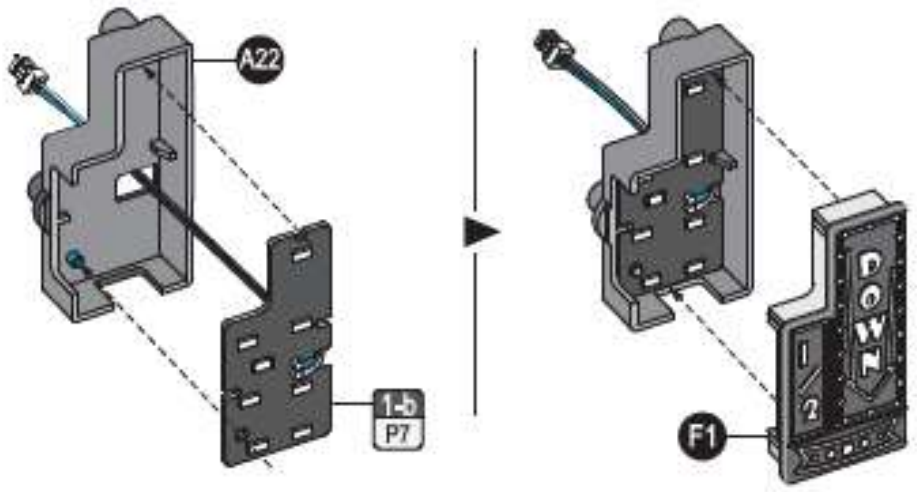

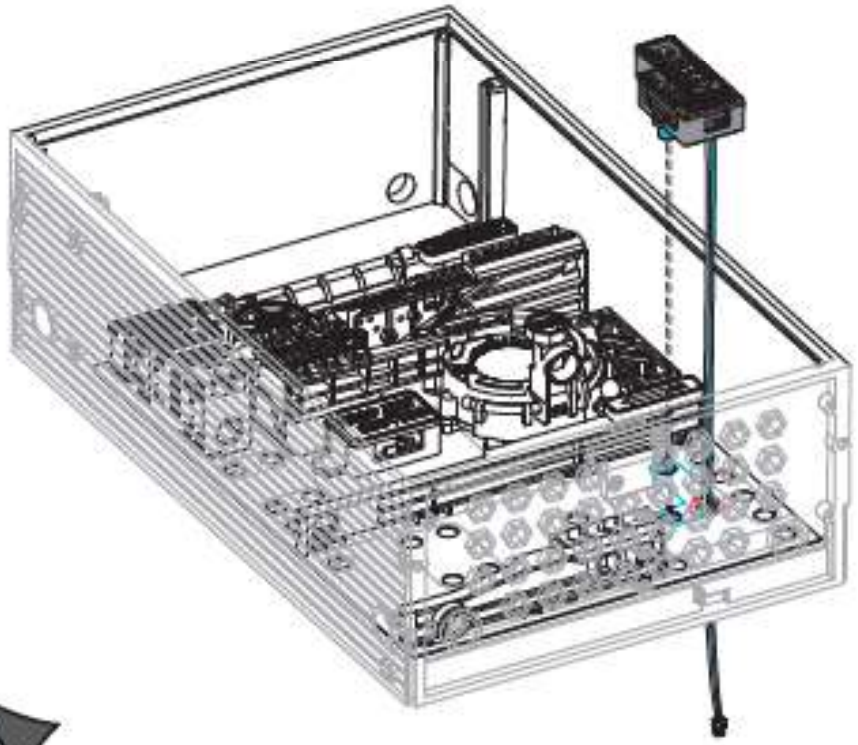

3

<14>

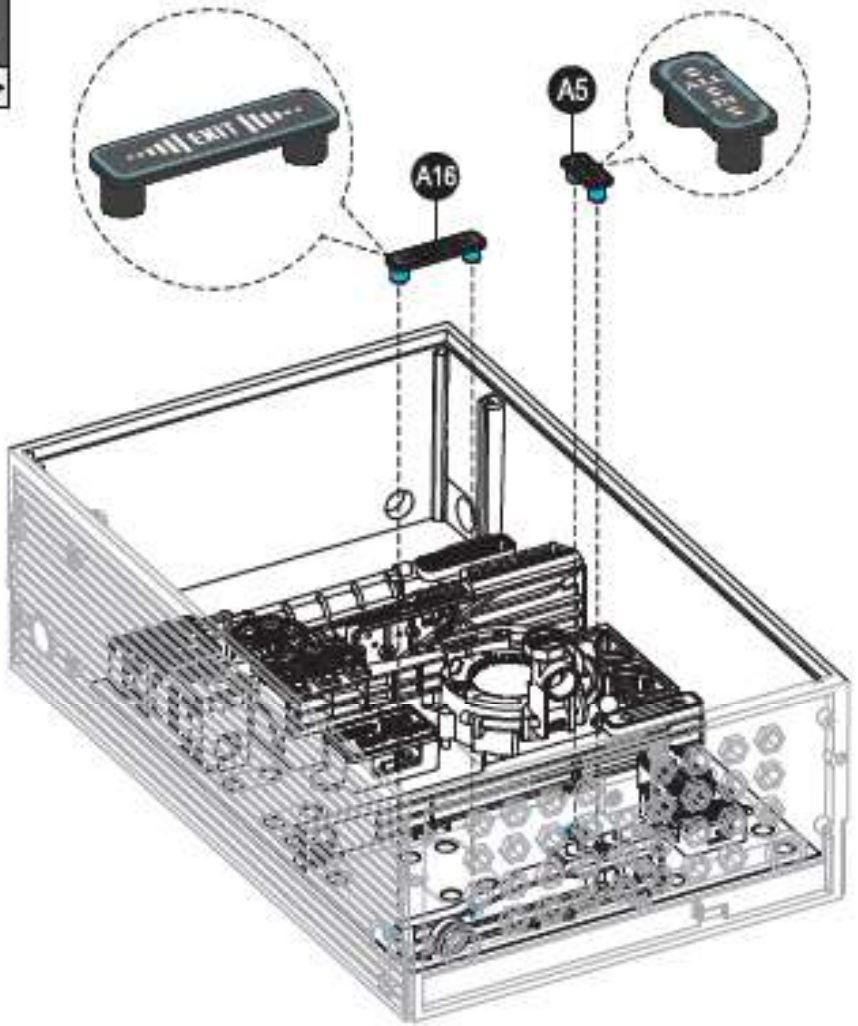

Hole position illustration

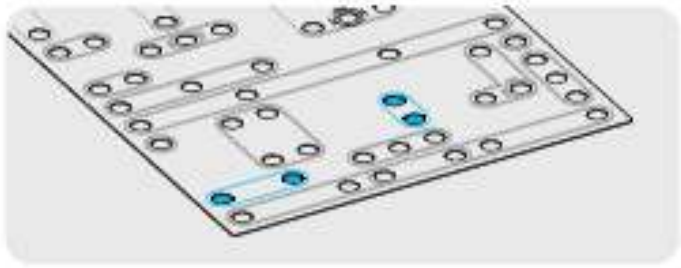

3

<15>

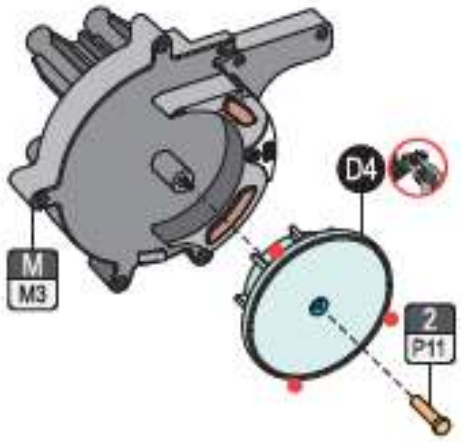
M
M3
D4
2
P11

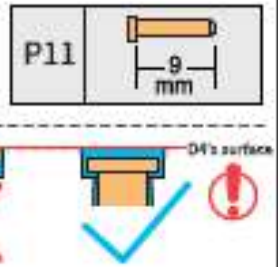
P11
9
mm
D4's surface

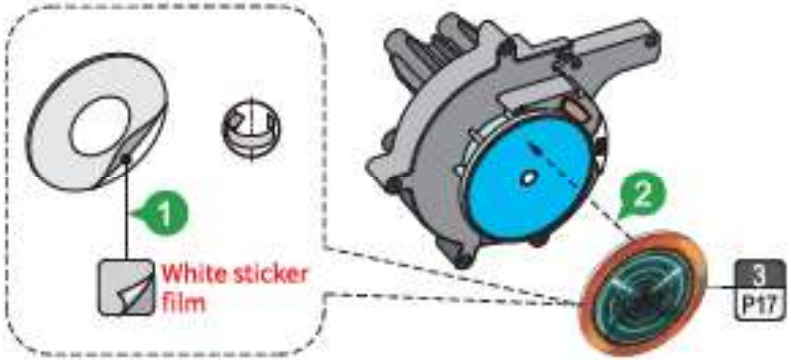
1
White sticker film
2
3
P17

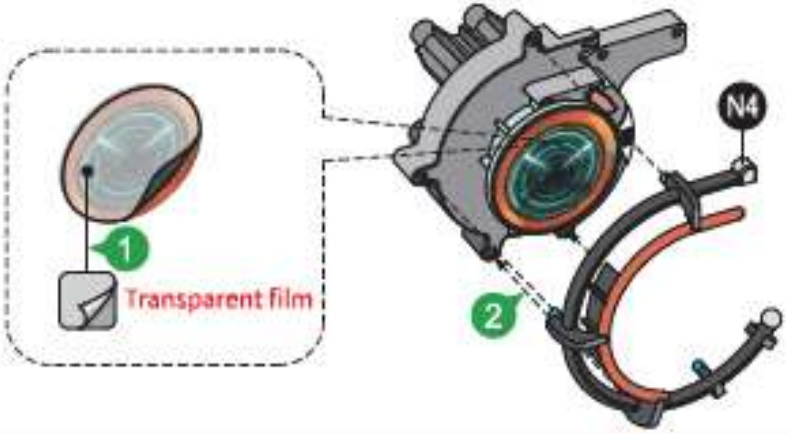
1
Transparent film
N4
2

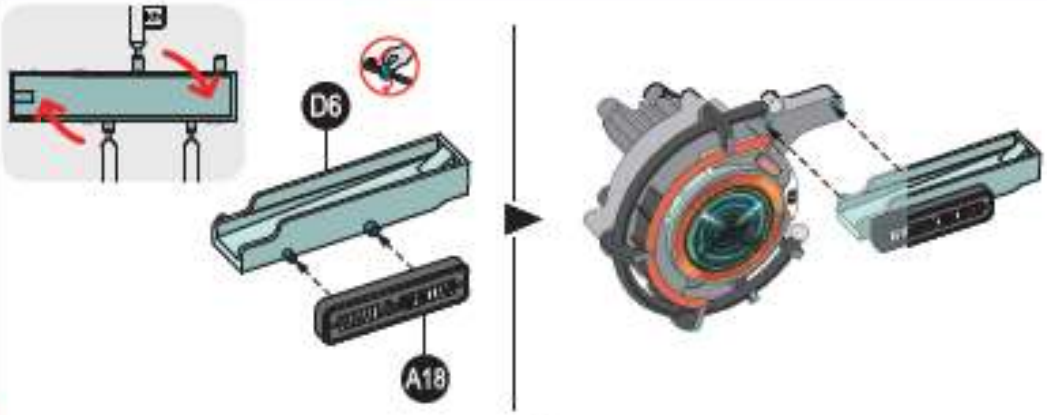
D6
A18

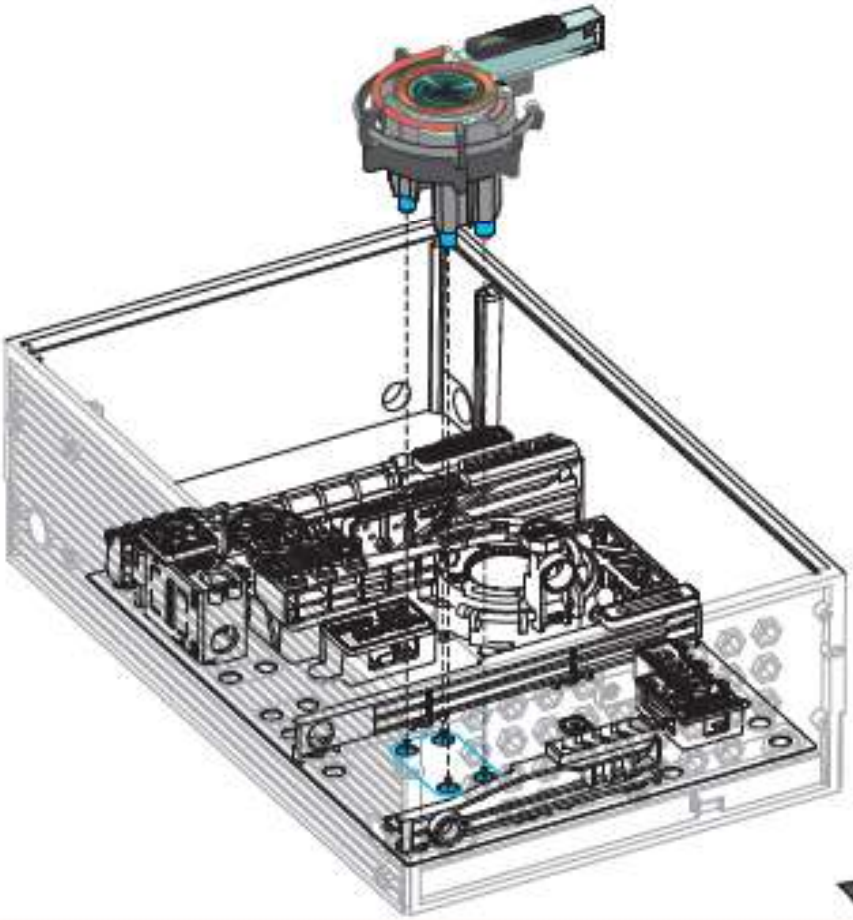

3

<16>

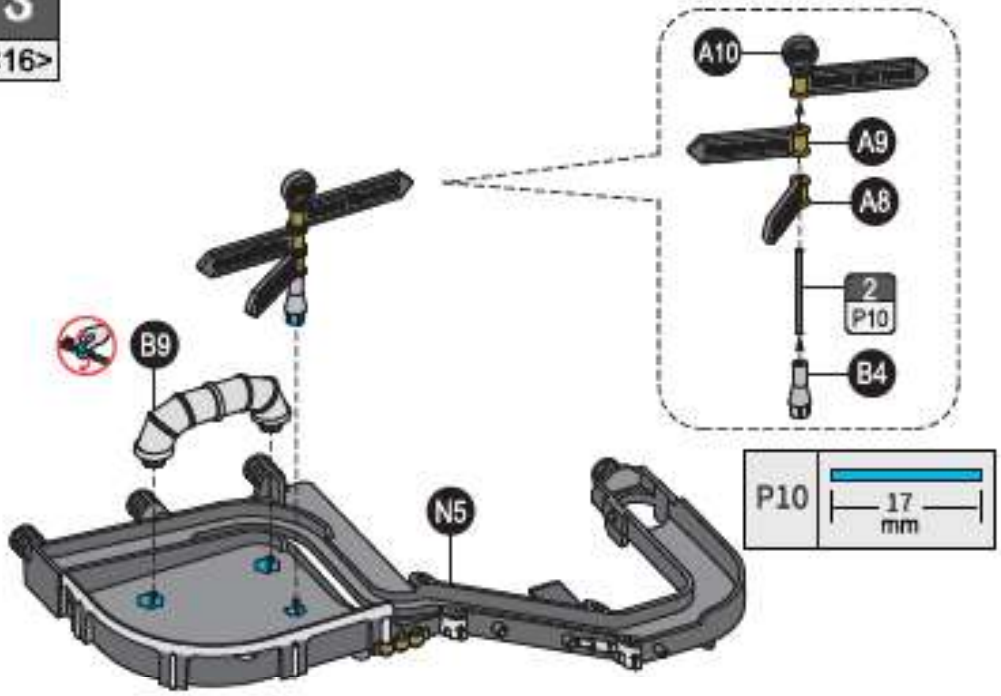

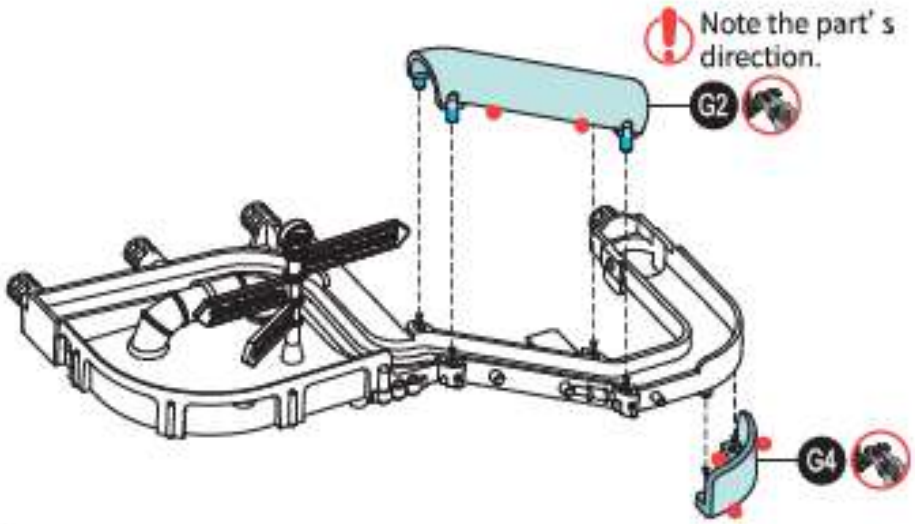

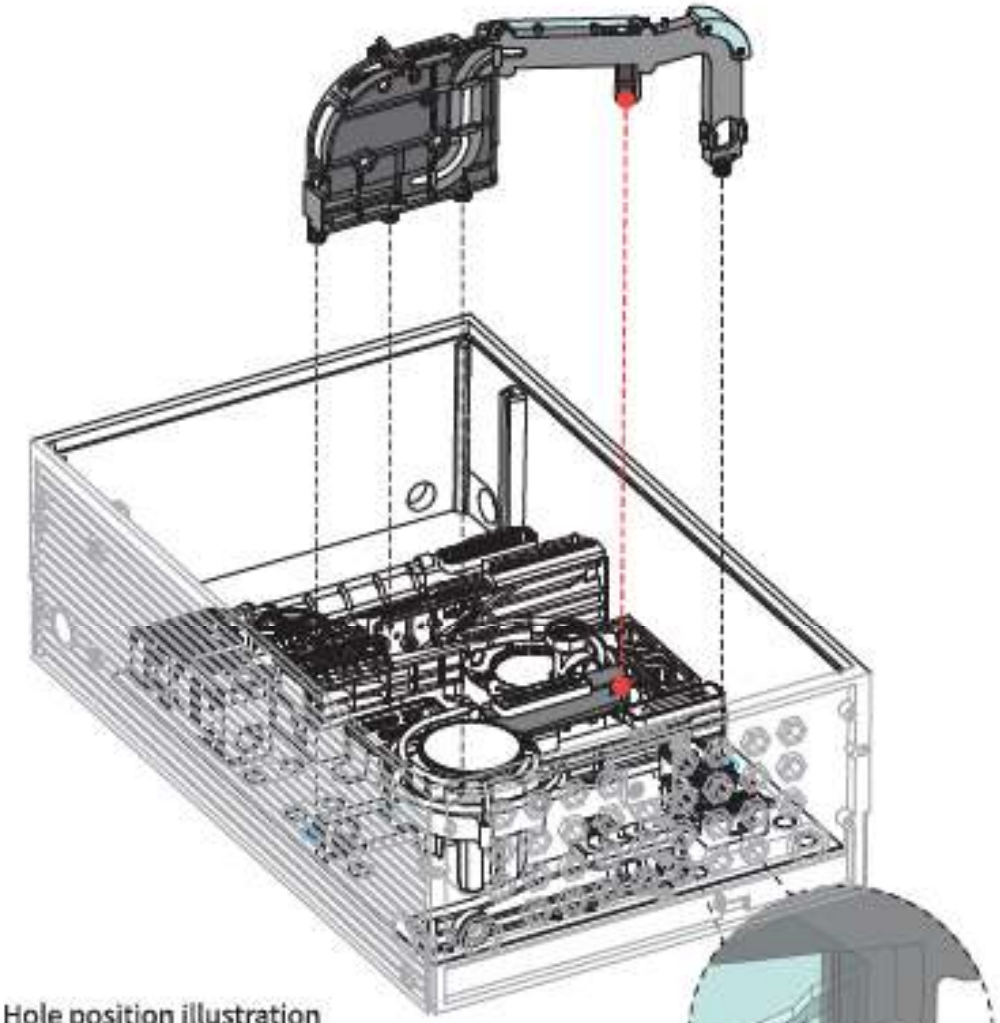

Hole position illustration

3

<17>

Removing sequence

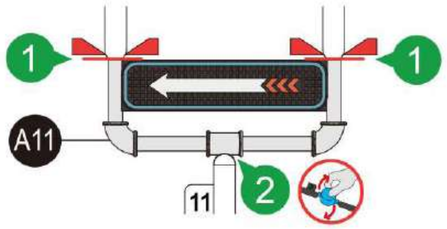

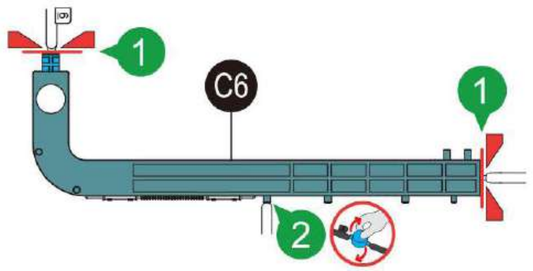

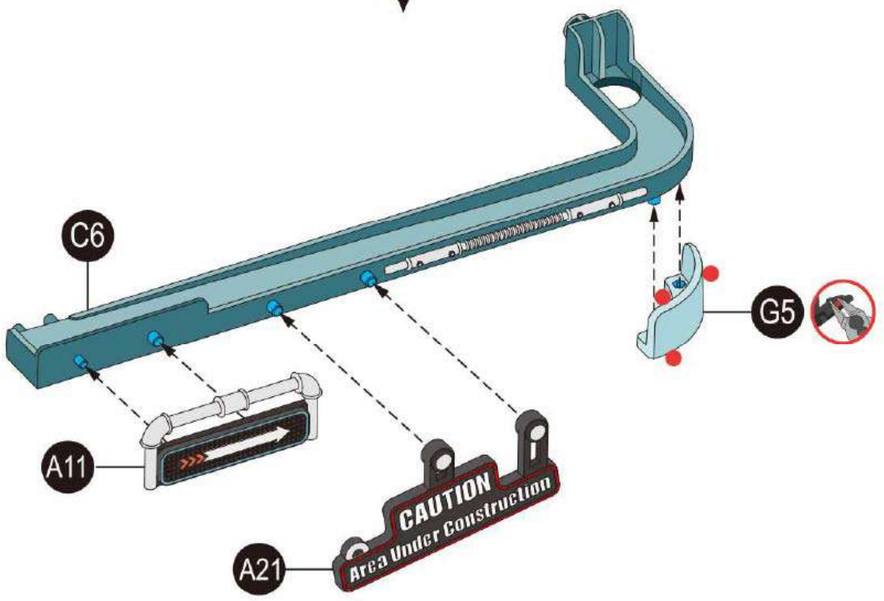

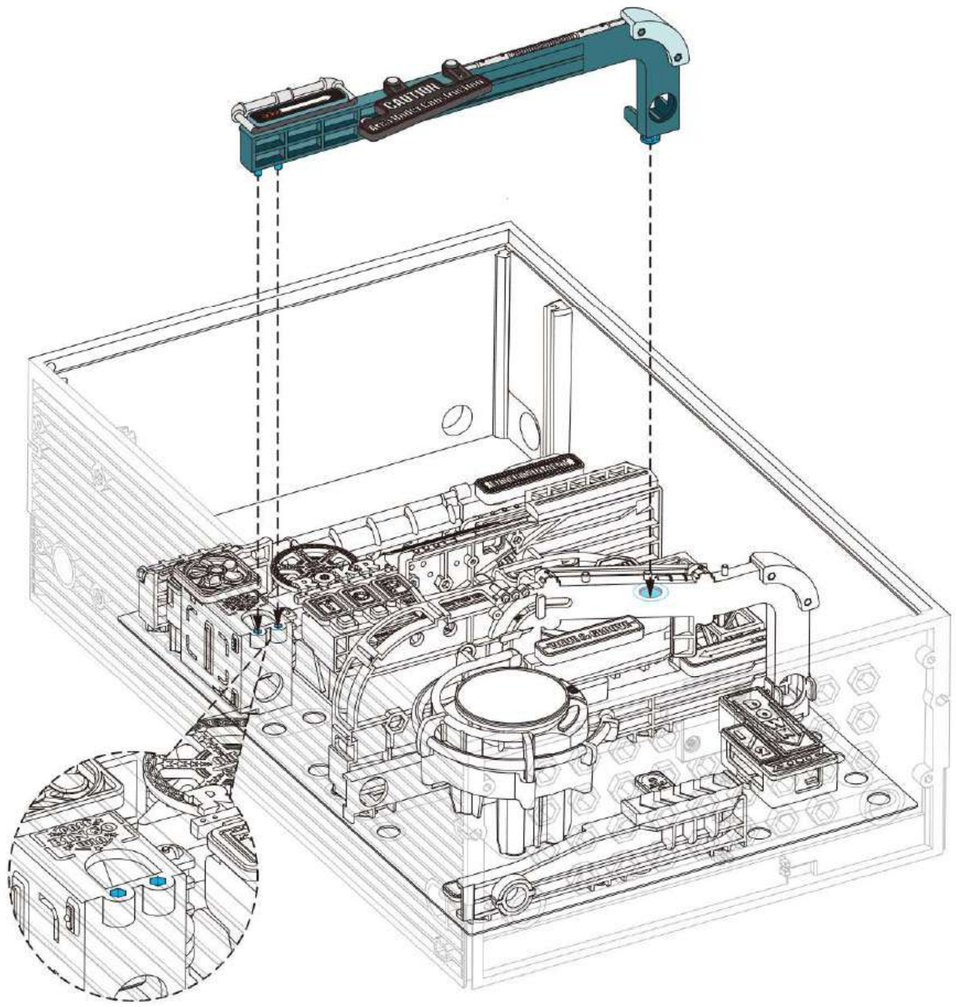

3

<18>

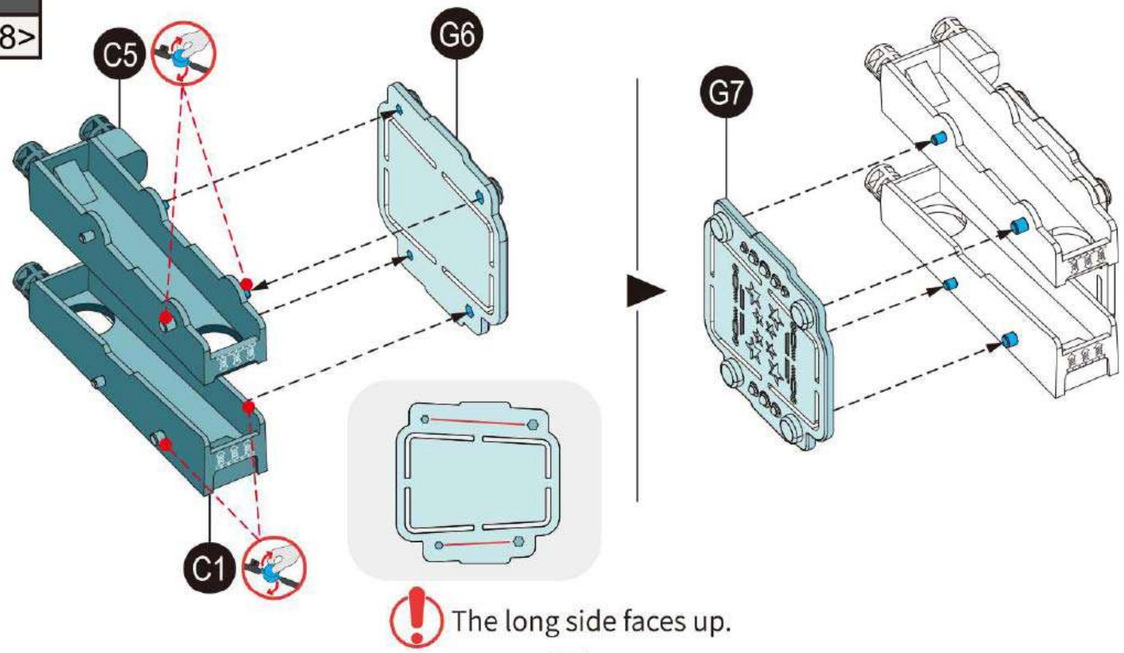

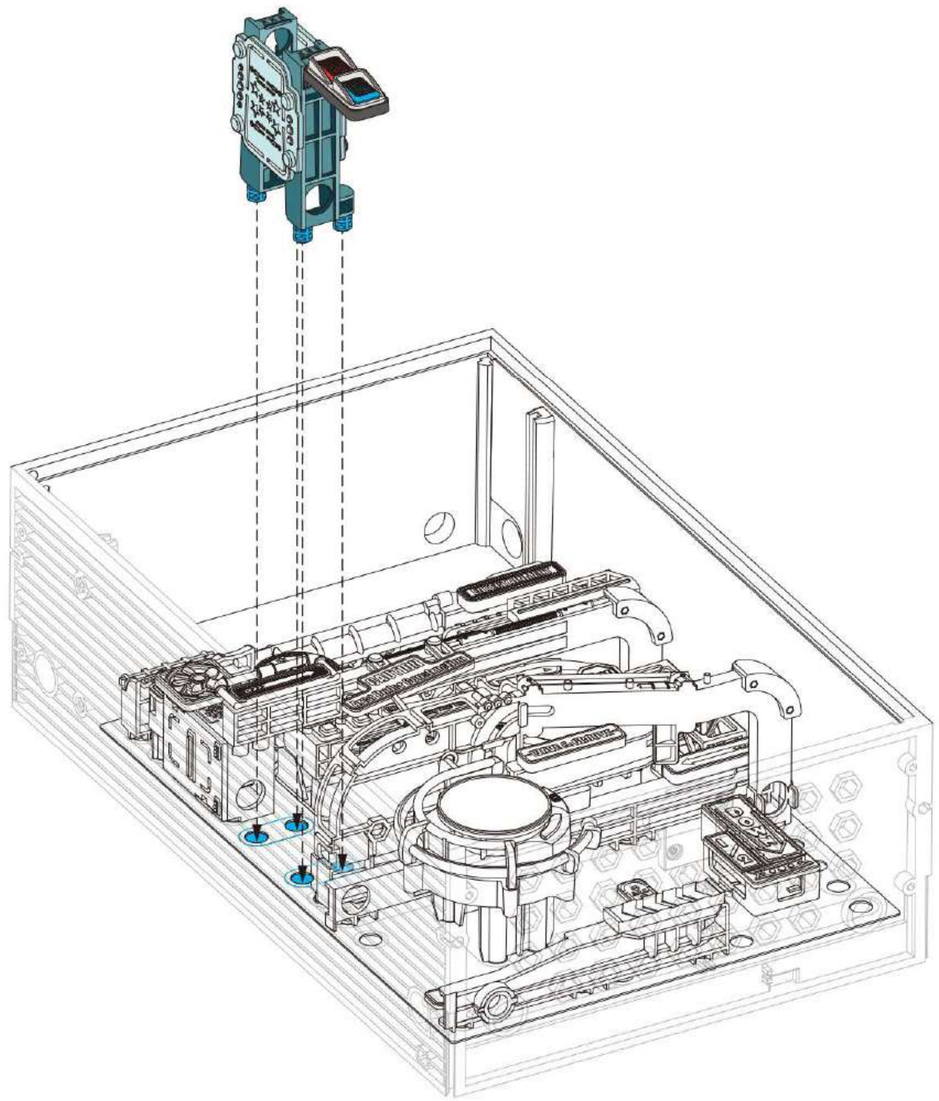

3

<19>

Note the part' s direction.

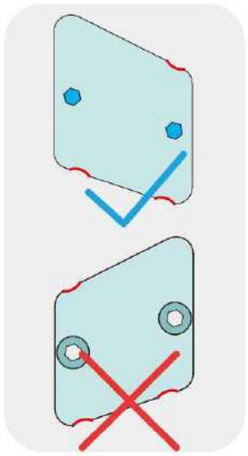

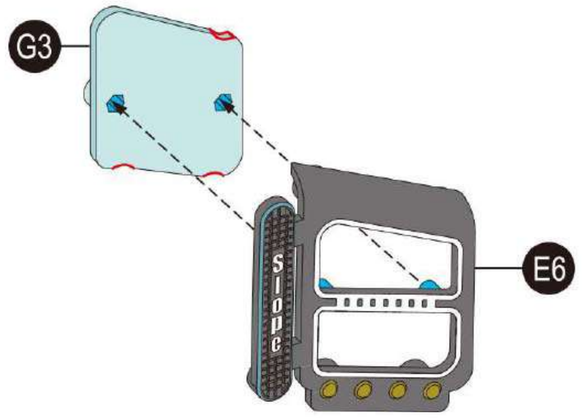

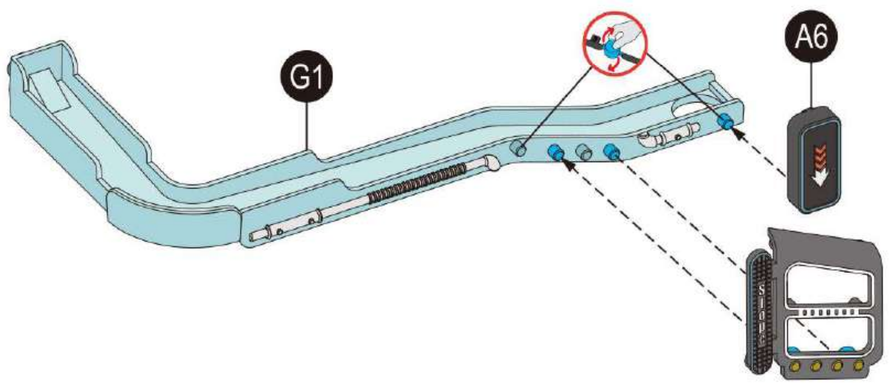

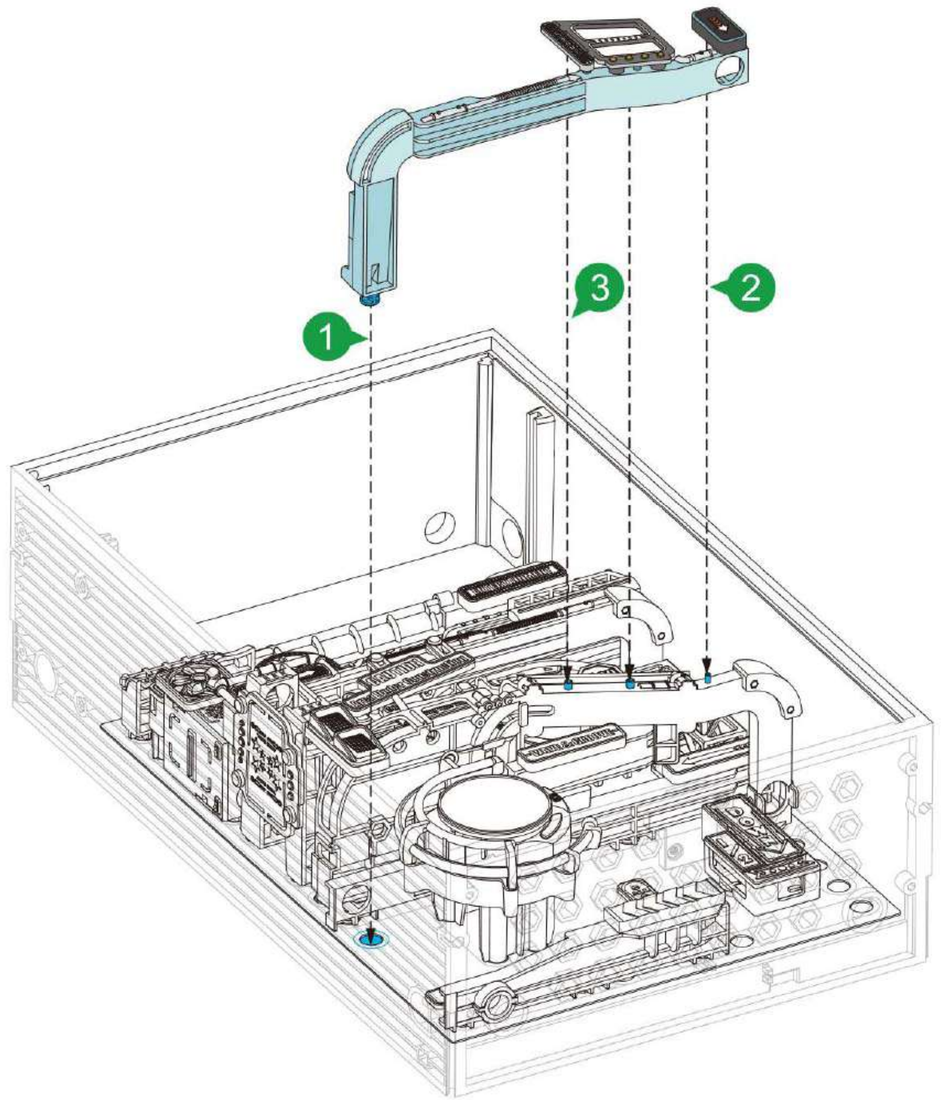

3

<20>

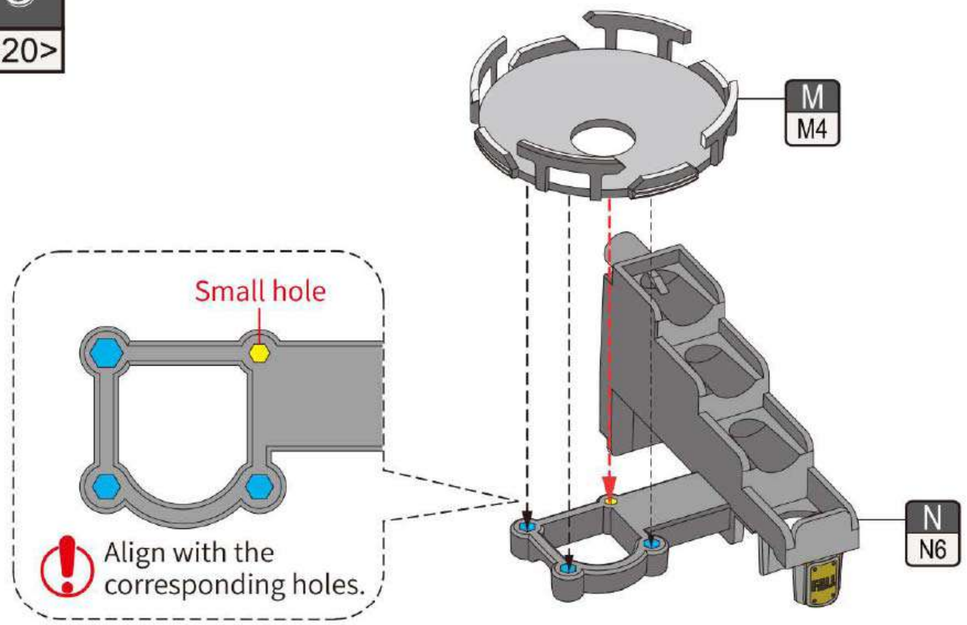
M
M4
Small hole
Align with the corresponding holes.
N
N6

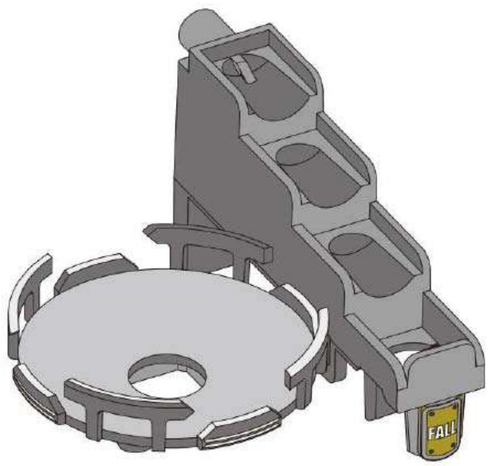

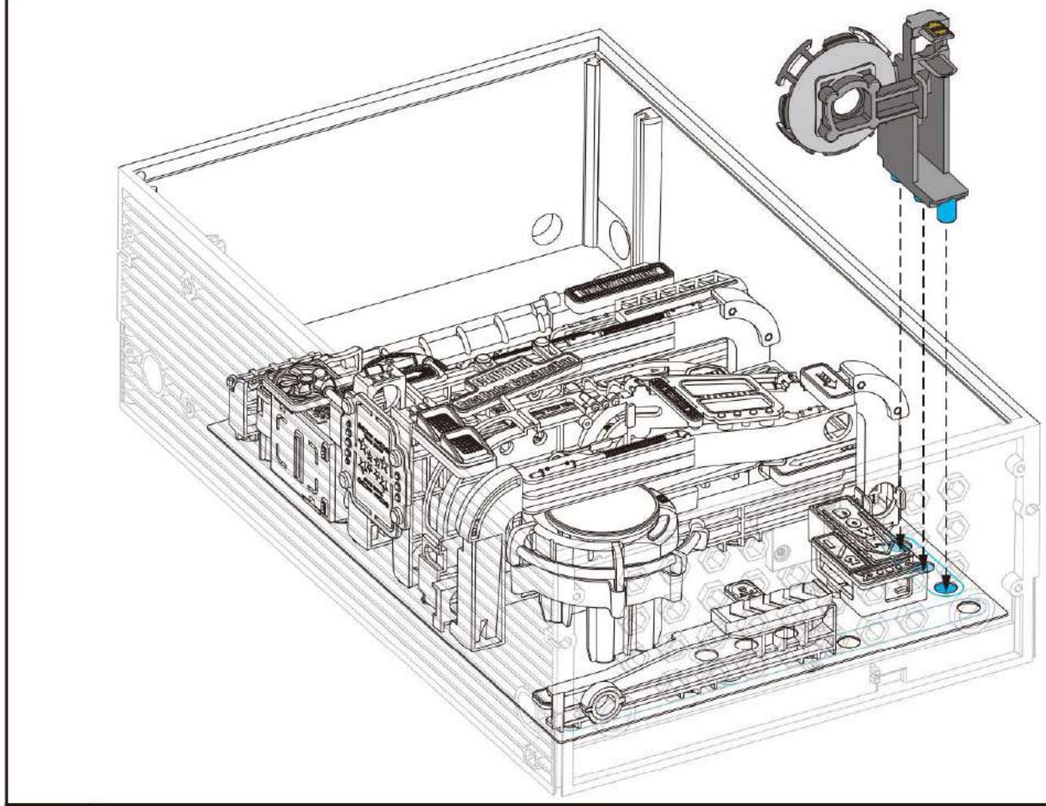

3

<21>

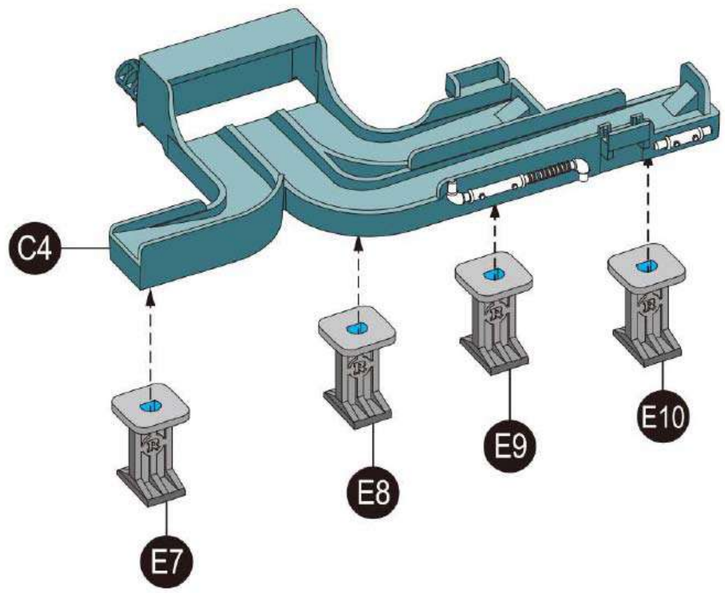
C4
E7
E8
E9
E10

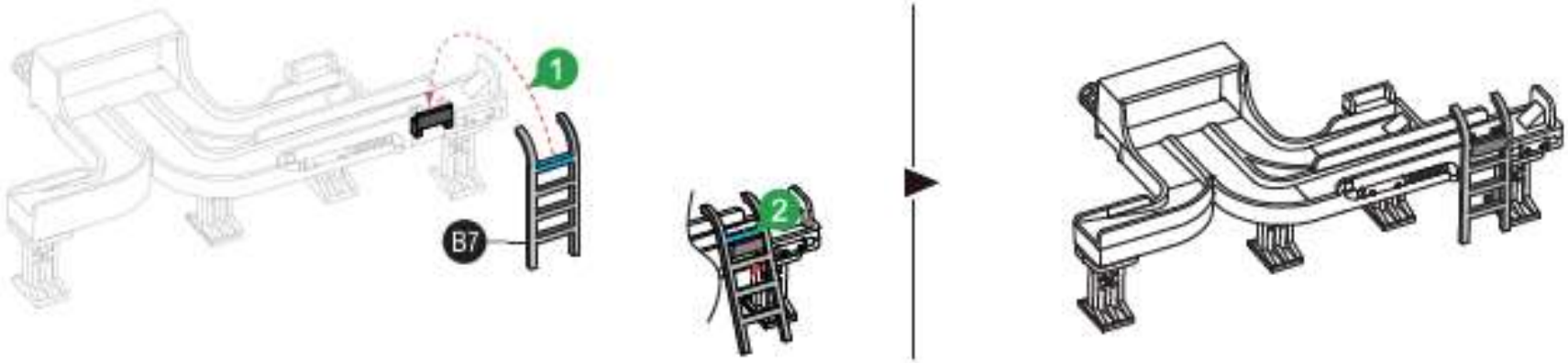
1
B7
2

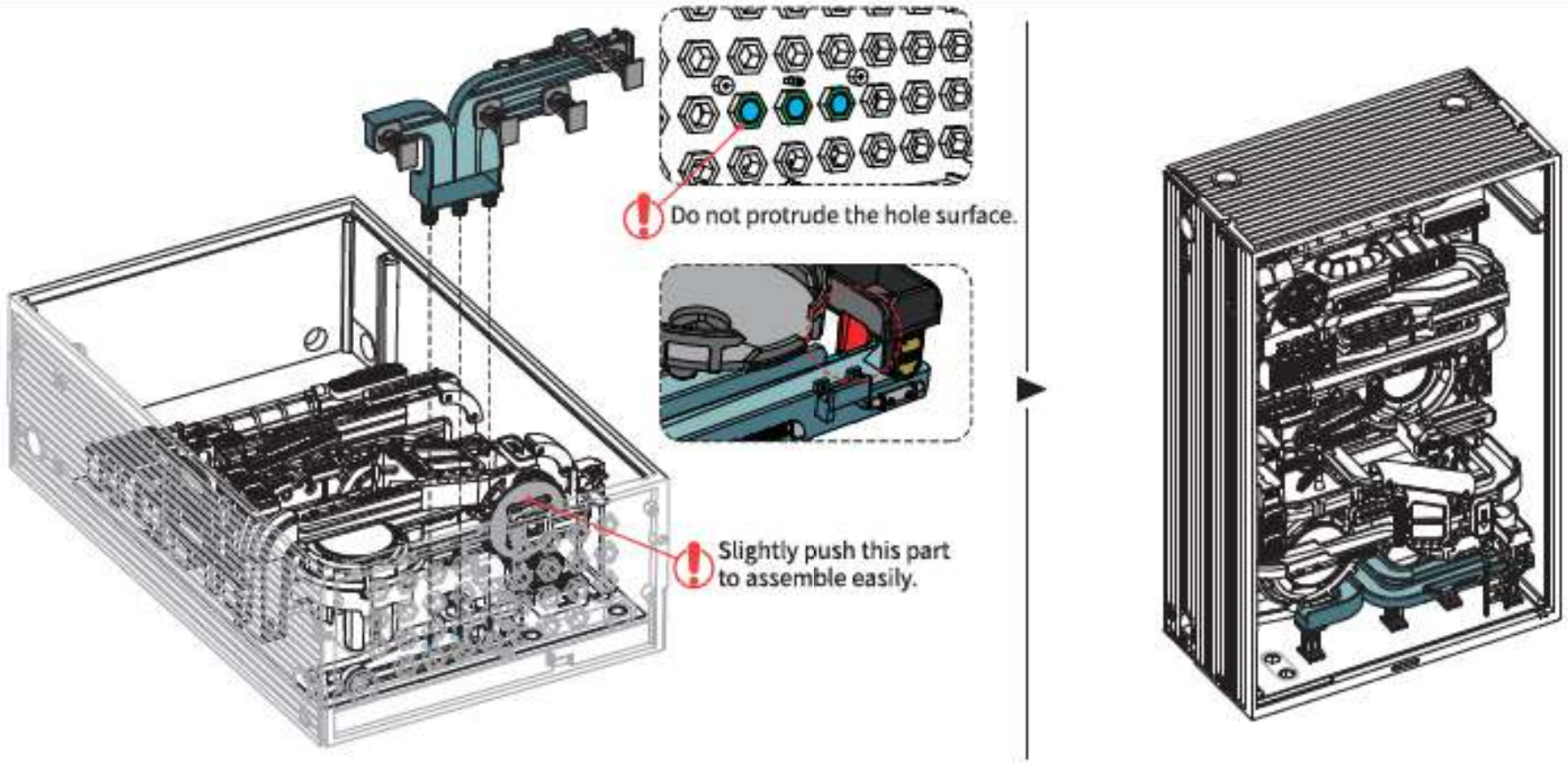
Do not protrude the hole surface.
Slightly push this part
to assemble easily.

3

<22>

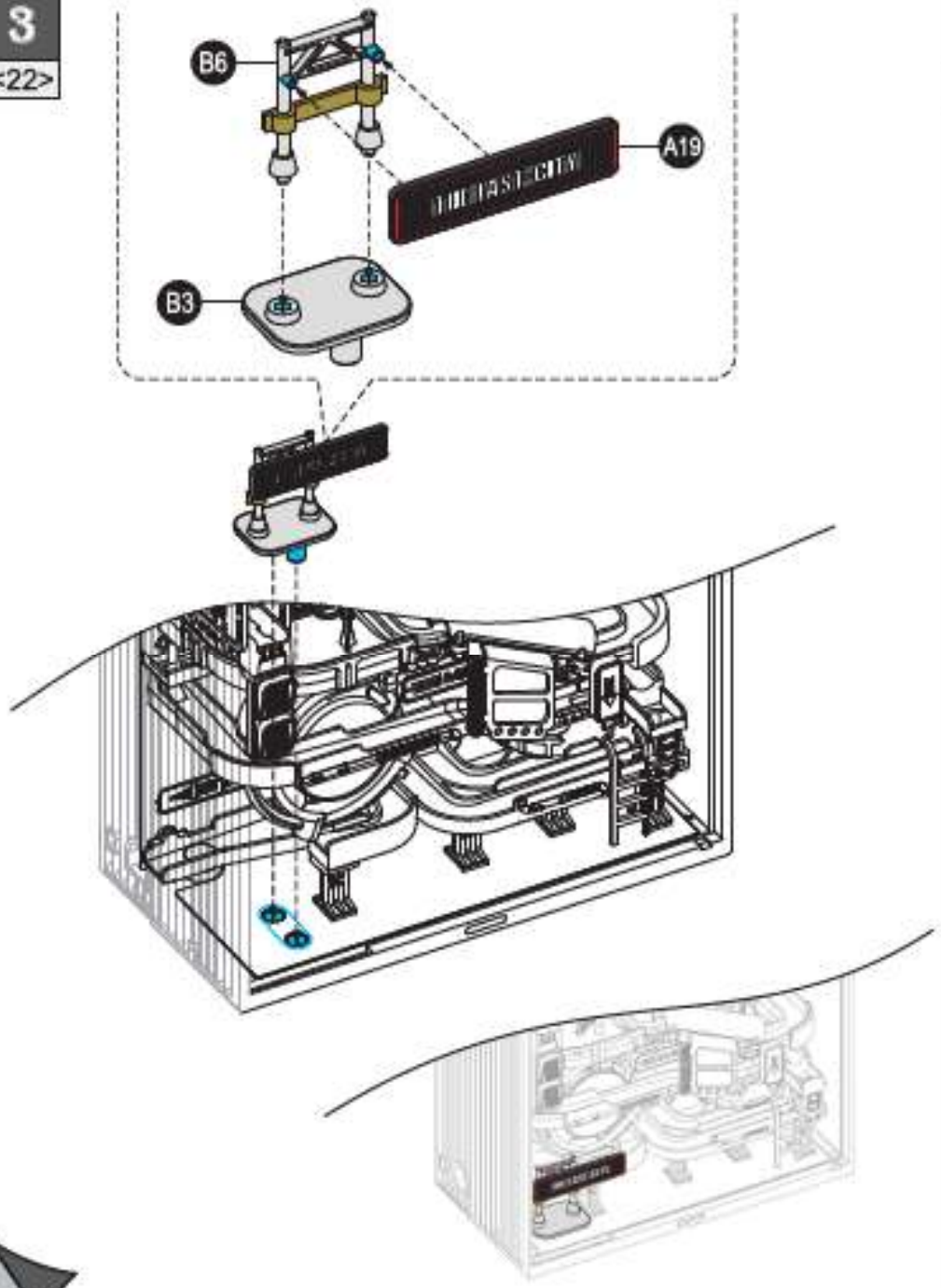

4 Basic Play (Assembly instruction for A/C)

<1>

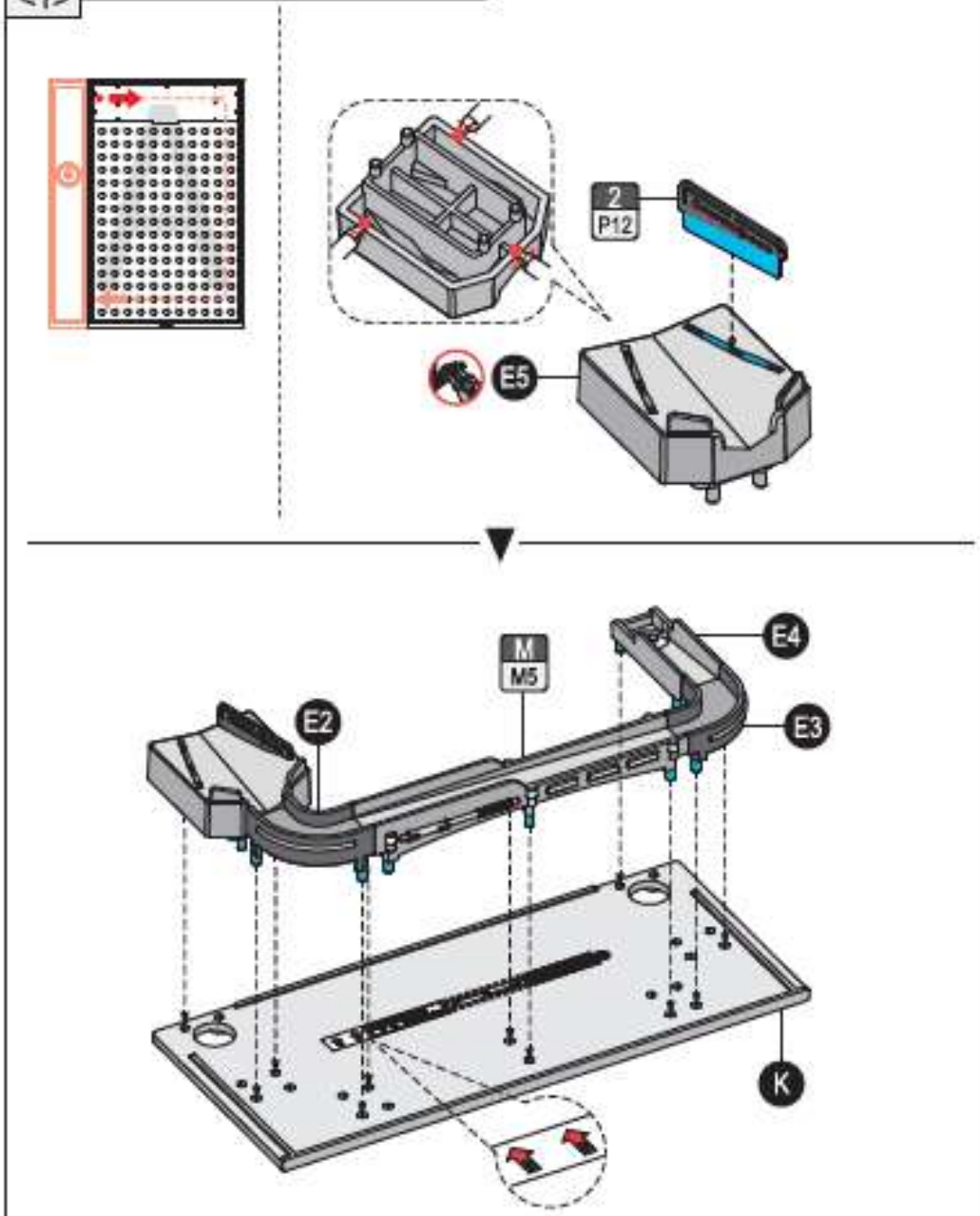

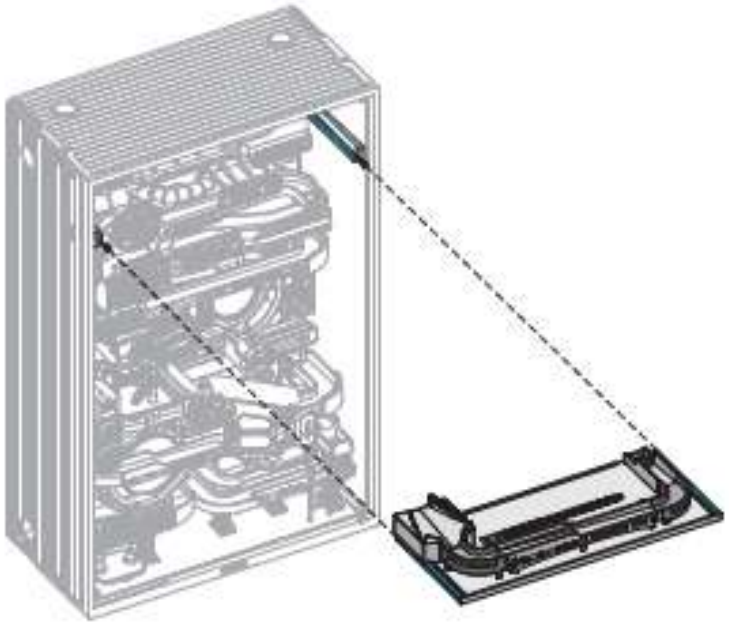

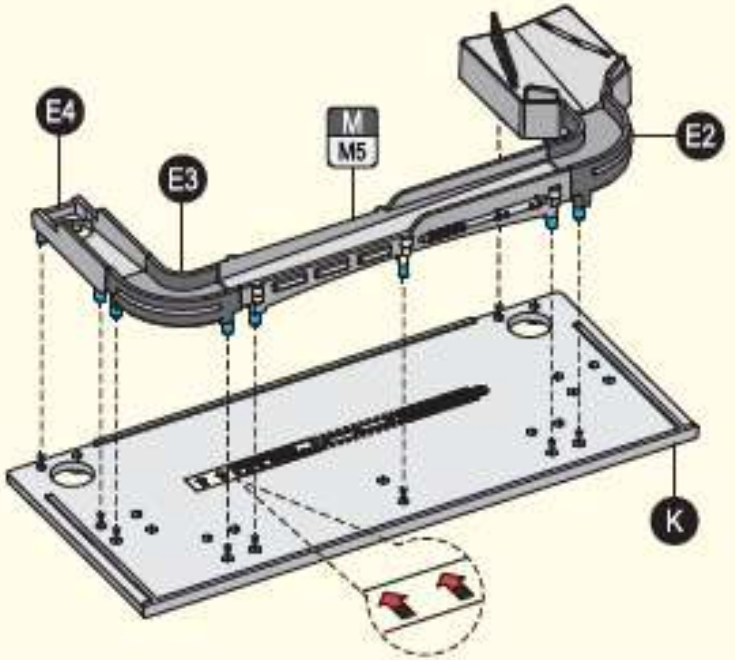

Advanced Play - Module Extension
(Skip it if not needed.)
(Assembly instruction for B/D)

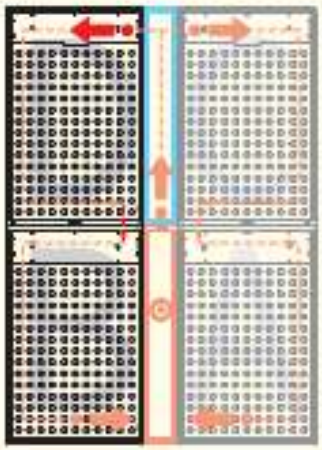

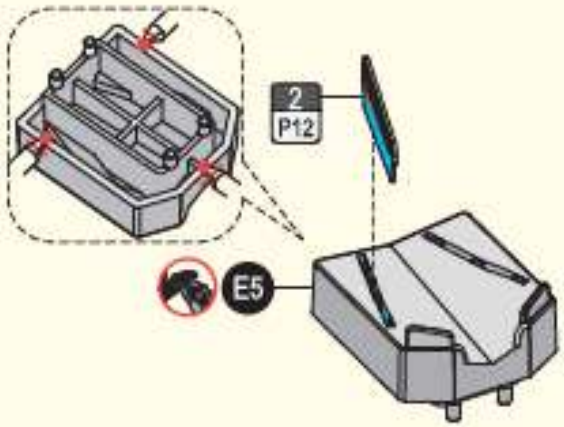

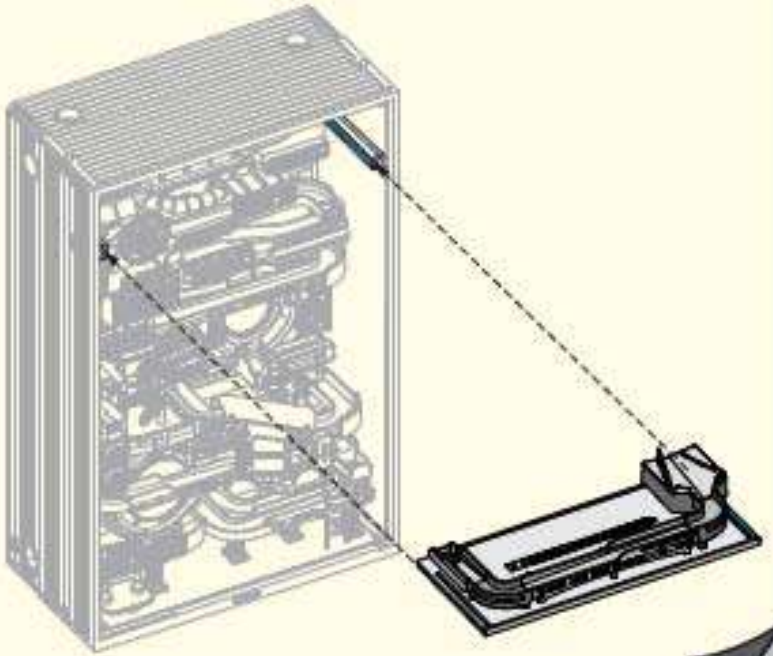

5 Test marbles' running

Put 12 marbles in sequence into the entrance at intervals of 1-2 seconds and observe if they can come out from the exit.
(Put too many marbles quickly may get stuck.)

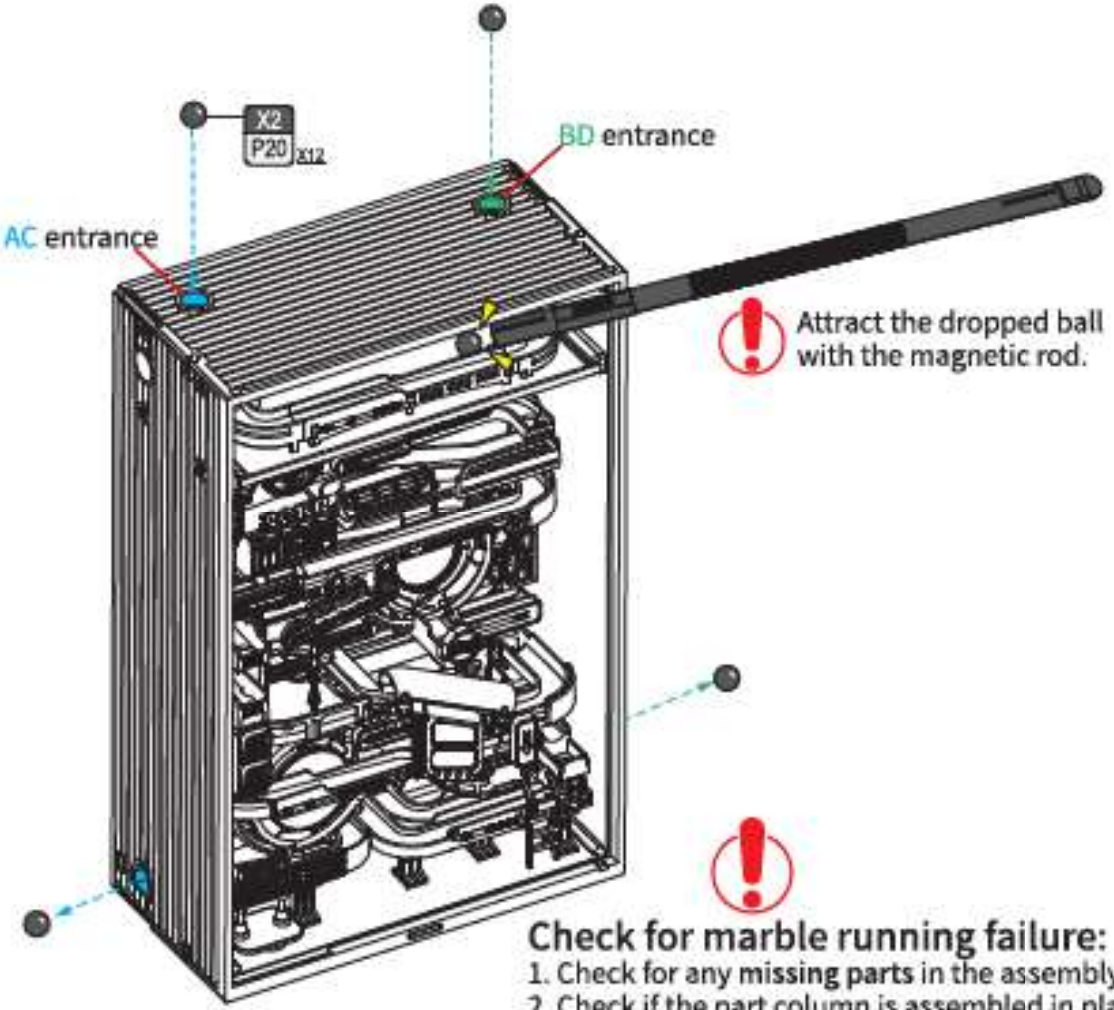

Attract the dropped ball with the magnetic rod.

Check for marble running failure:

1. Check for any **missing parts** in the assembly.
2. Check if the part column is assembled in place.
   It should be flushed with the hole surface.
3. **All tracks should be connected in place.**

6

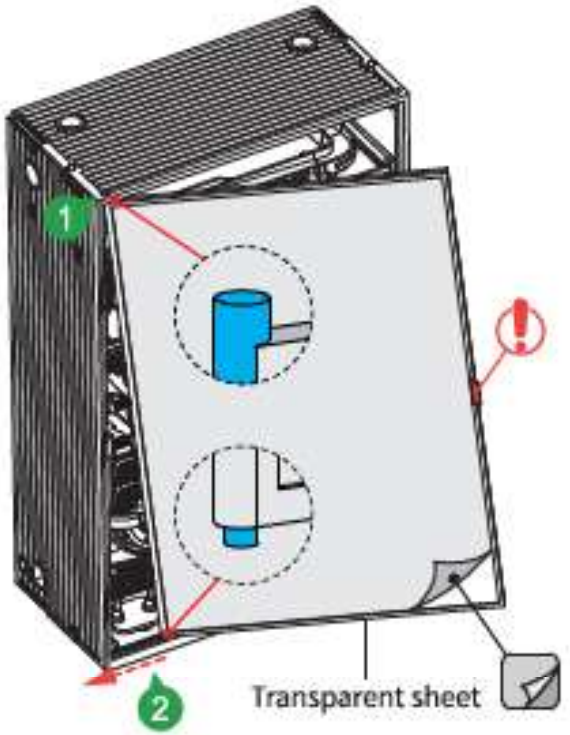

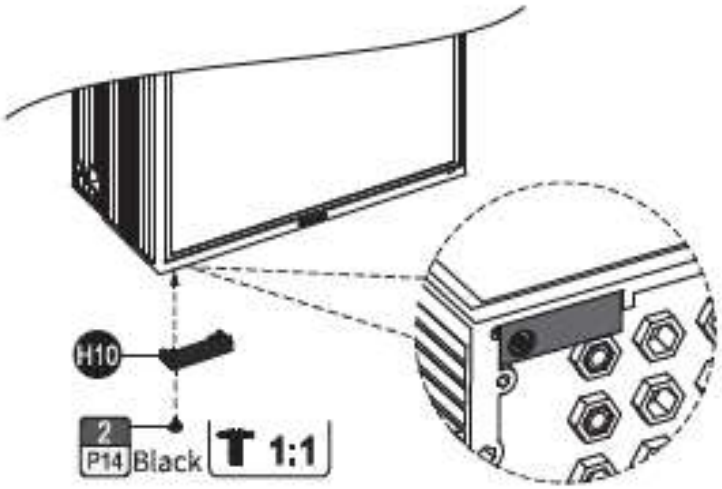

7

<1>

Note the terminal direction.

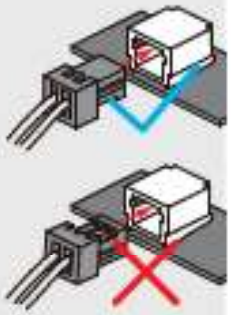

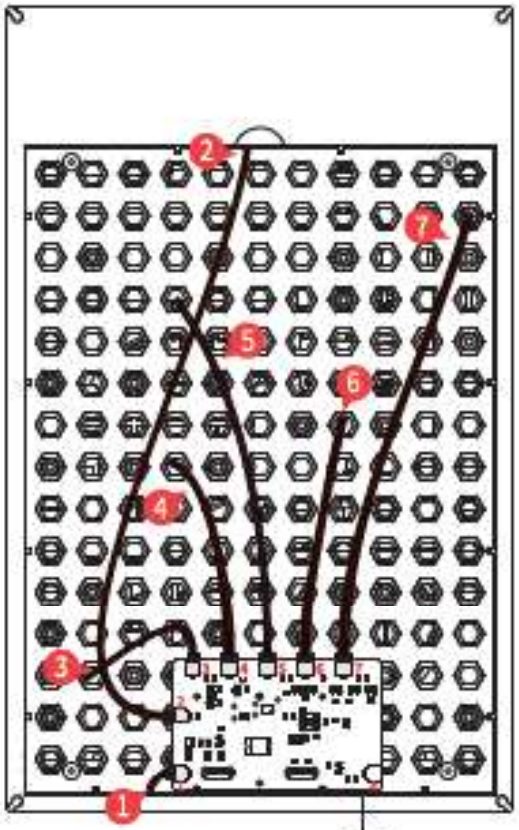

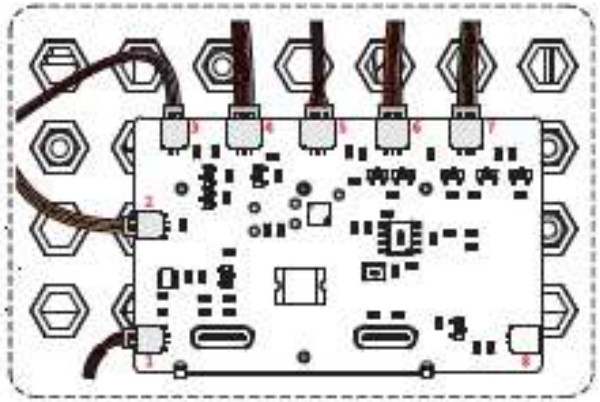

7

<2>

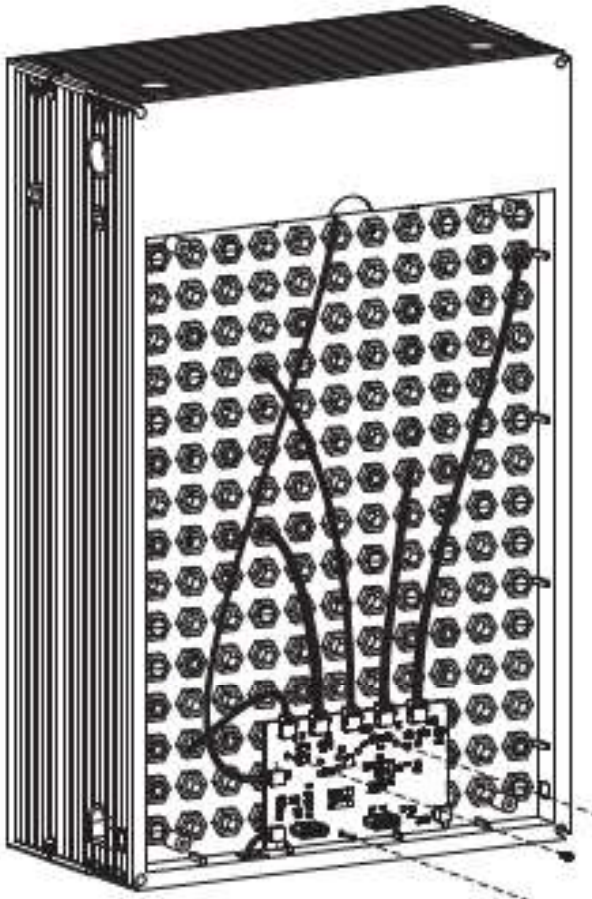

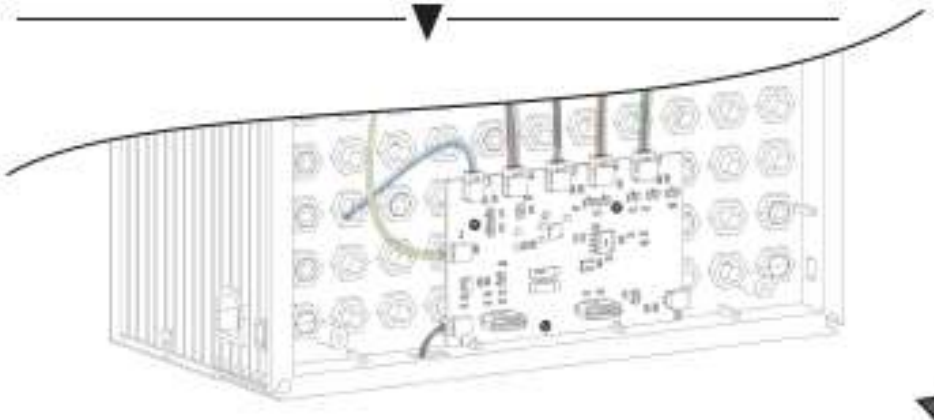

7

<3>

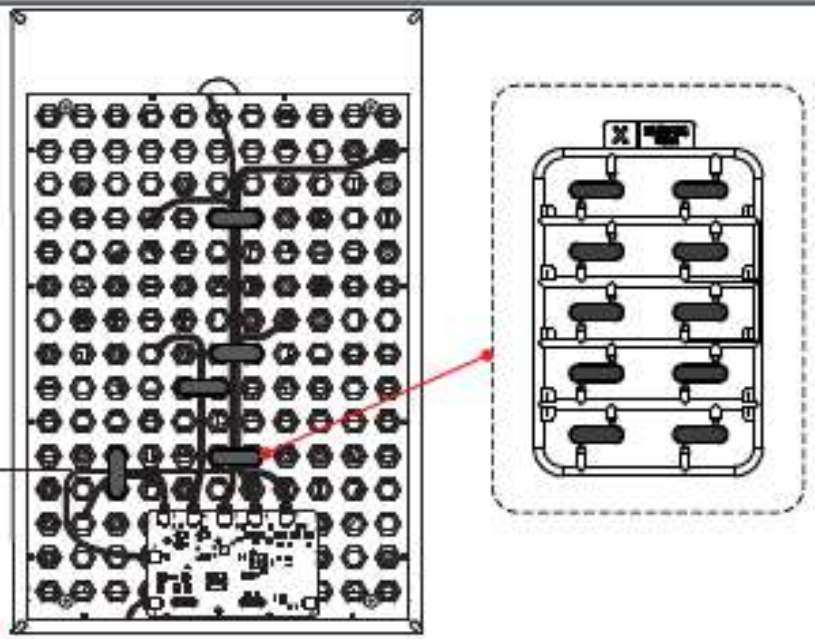

Secure the wire with the sticker as shown.

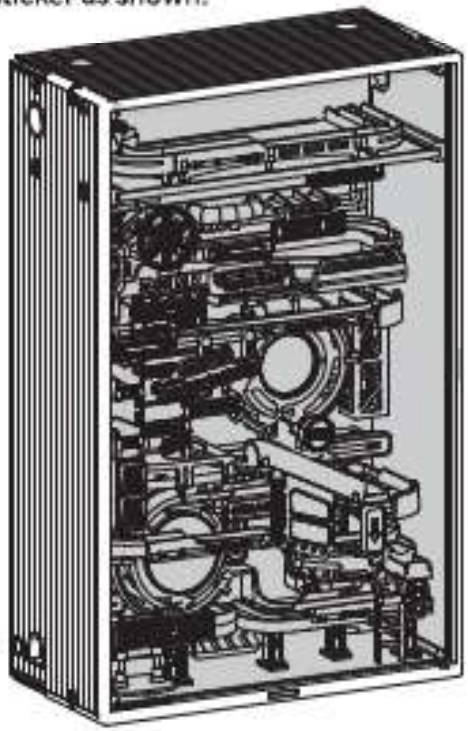

The marble run module is completed.

8 Basic Play
(Assembly instruction for A)

(Refer to the assembly instruction of Lift .)

8

<1>

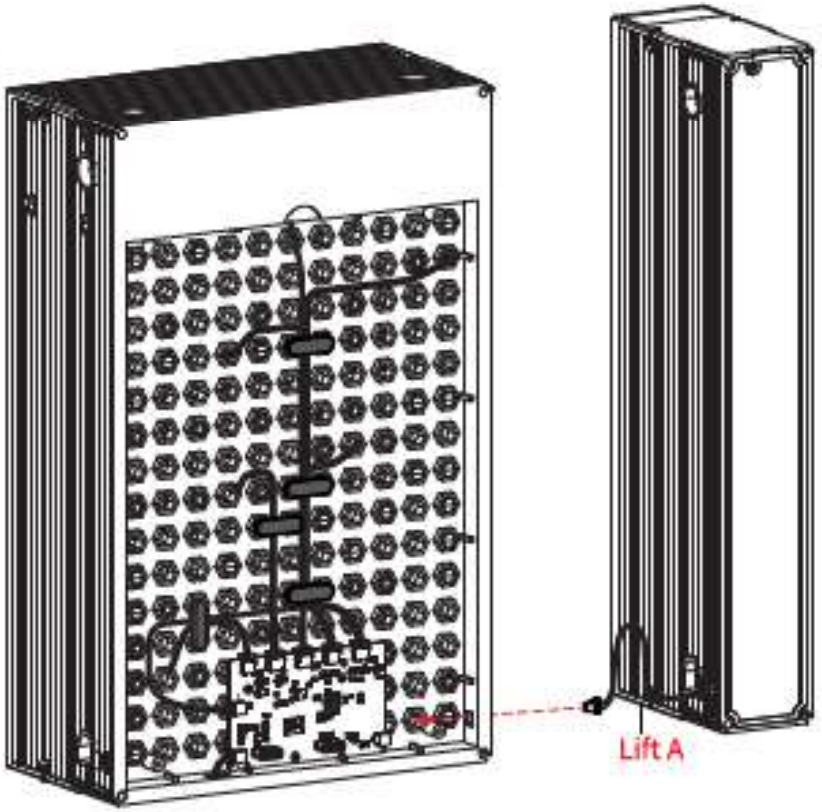

8

<2>

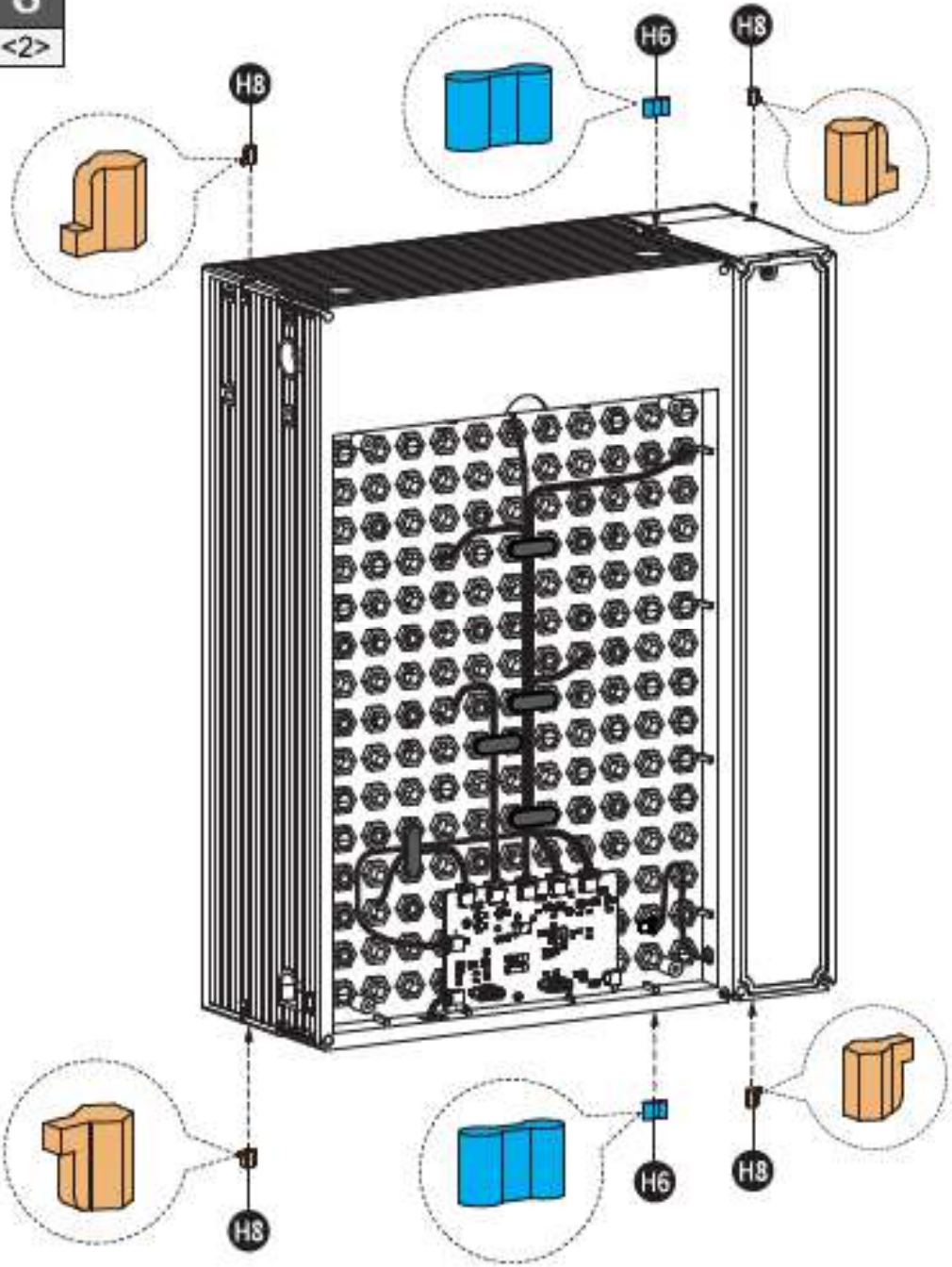

8

<3>

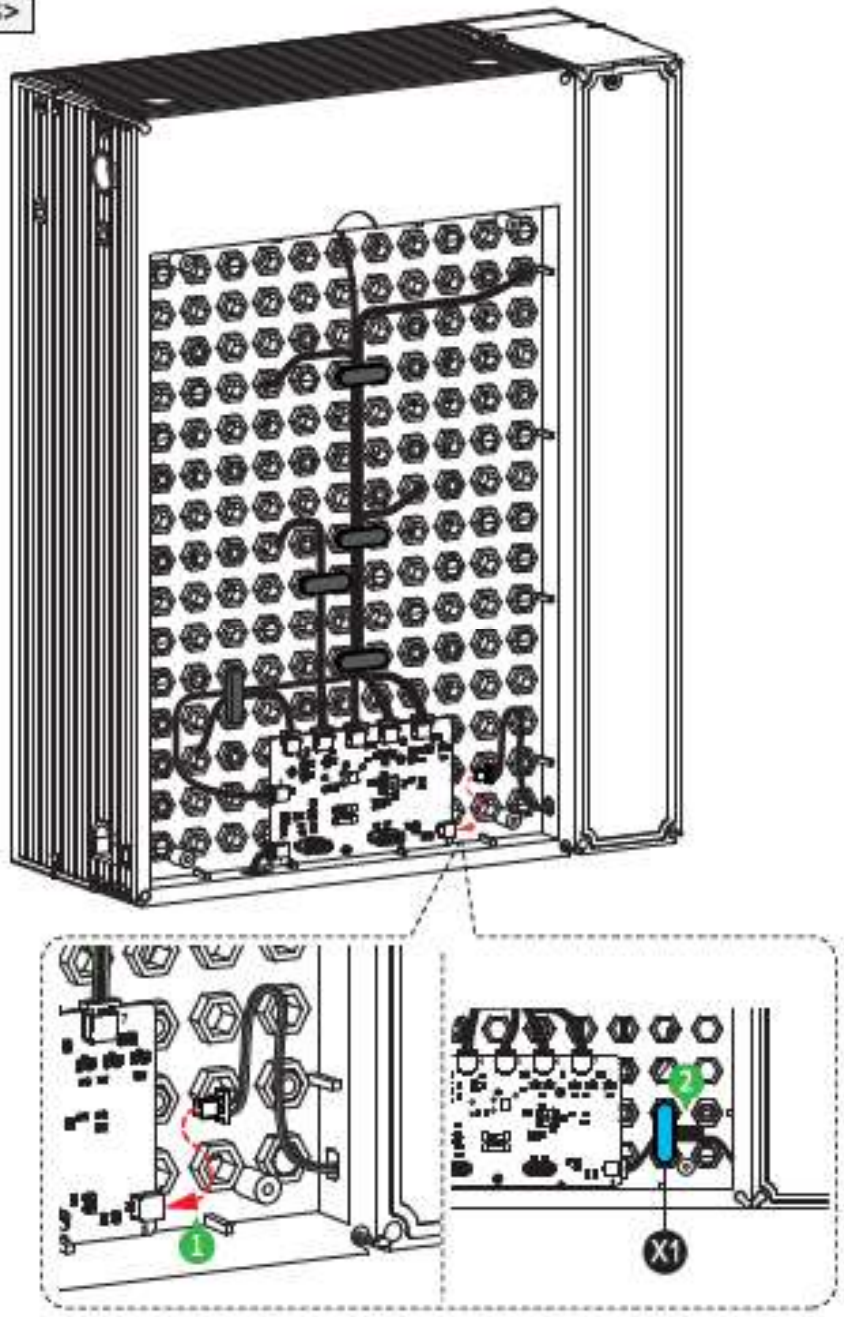

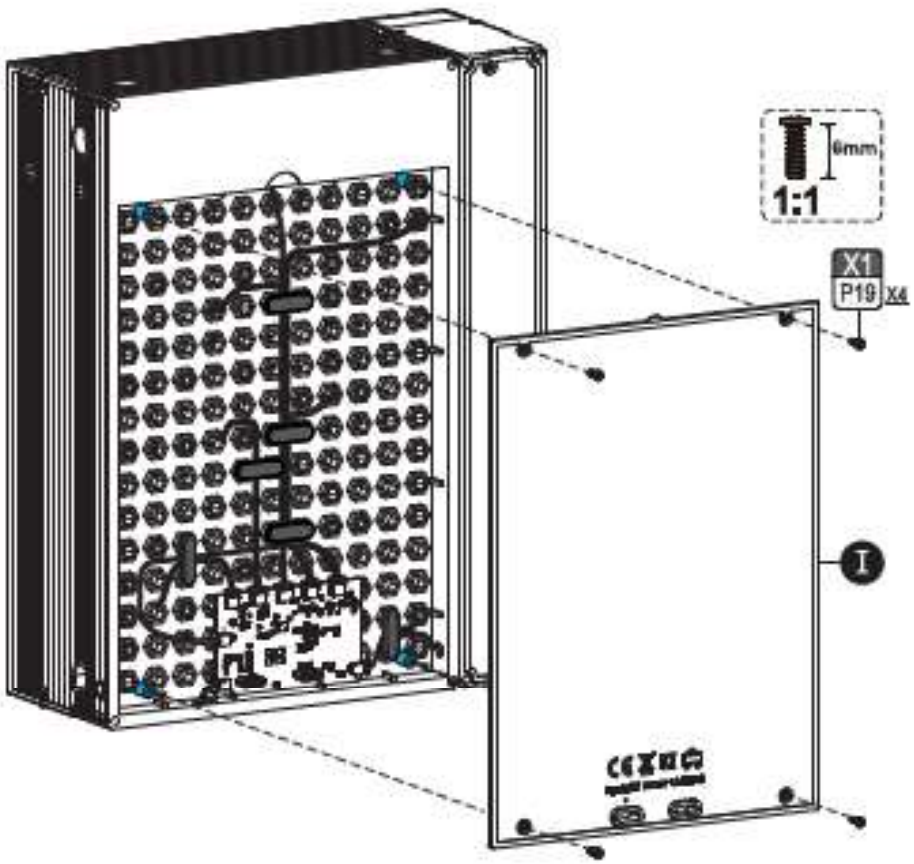

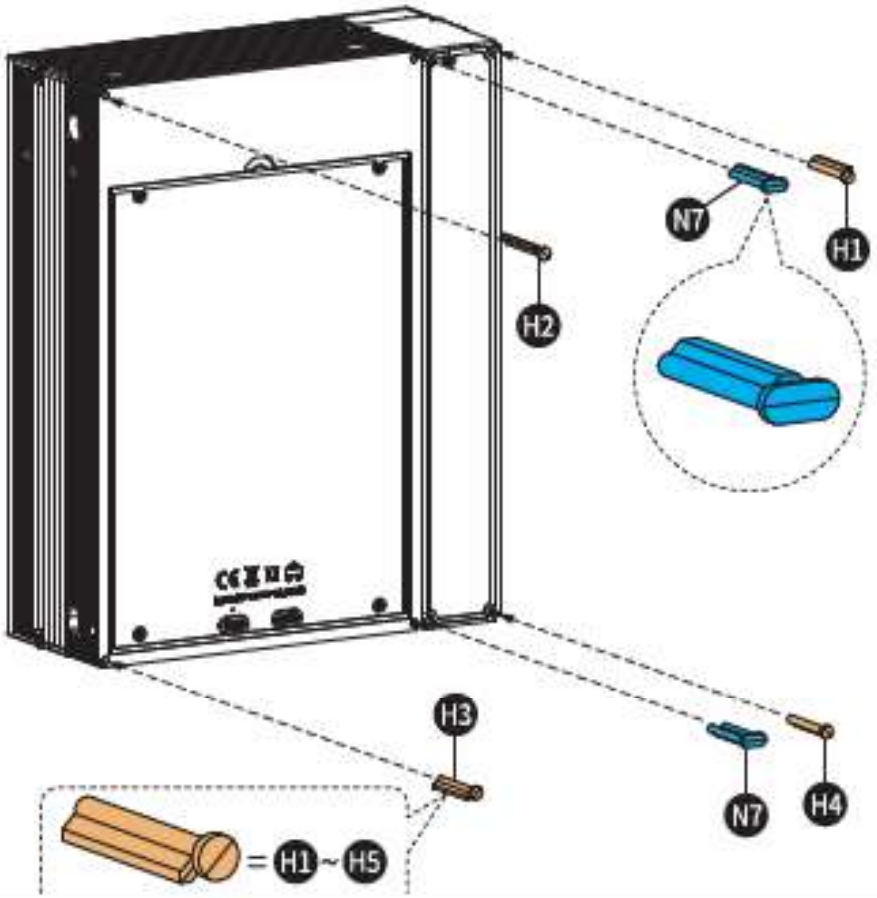

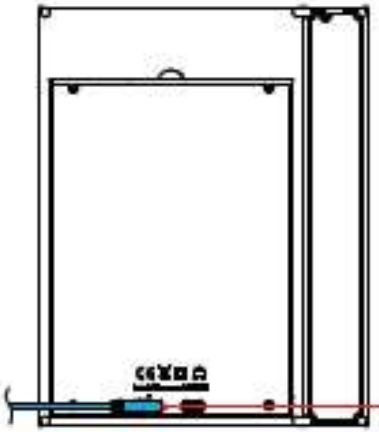

Suggest to use a regular power adapter.
Input: 5V⎓2A

Complete for the basic play.

PARALLEL WORLD

MARBLE RUN

MR01 THE LAST CITY

Attention:

1. 2 modes:
·Marble rolling: The light flashes, the Lift works and marbles begin to run cyclically.
It will automatically power off after running for 10 minutes.
·Lighting display: The light flashes, the Lift stops and marbles stop running.
It will not automatically power off .

2. Switch on/off:

Touch the button of any marble run module can control all connected modules.

3. Please keep the tool kit of the product well for later maintenance.
4. Keep the remaining parts well for extension playing.

MARBLE RUN

PARALLEL WORLD

Advanced Play - Module Extension

ASSEMBLY INSTRUCTIONS

Advanced Play - Module Extension Instruction

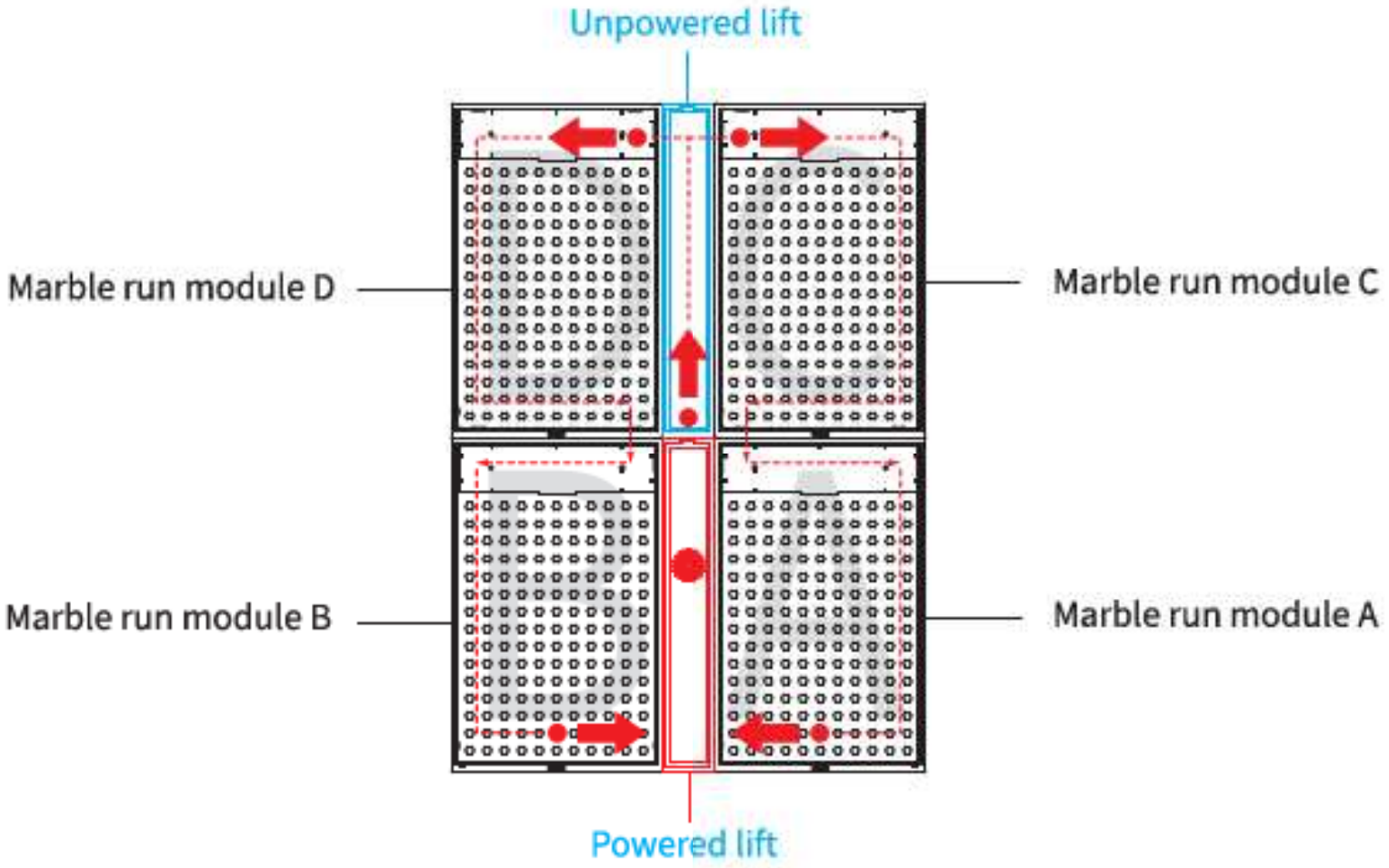

· One system for advanced play includes 2 lift modules and 4 marble run modules as shown.
· Assembling methods for lift and marble run module at different positions are different, please assembly lift and marble run module according to the instruction.

The Last City - Position Switching Instruction for Marble Run Module

Scan for switching position D into position A, B, C

Position D

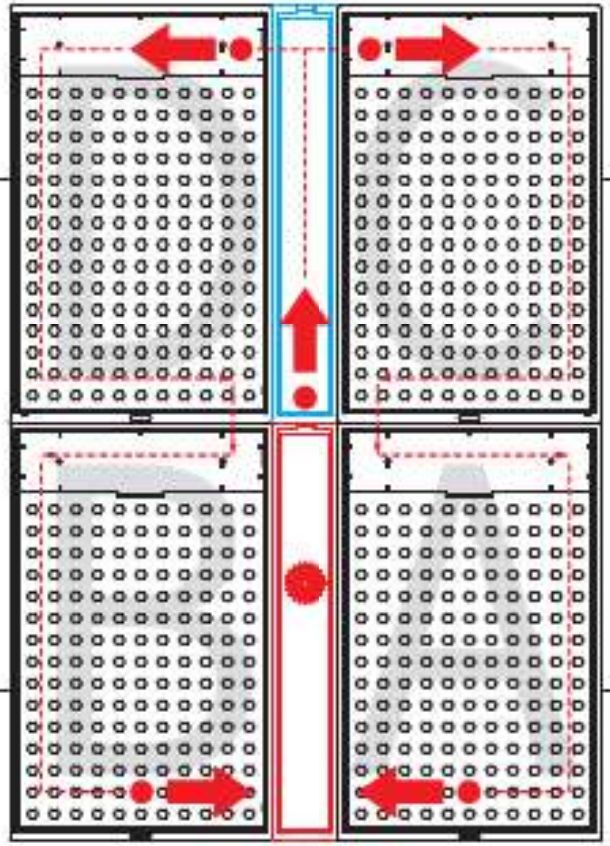

Position C

Scan for switching position C into position A, B, D

Scan for switching position B into position A, C, D

Position B

Position A

Scan for switching position A into position B, C, D

Assembly instruction for 5 kinds of common advanced play

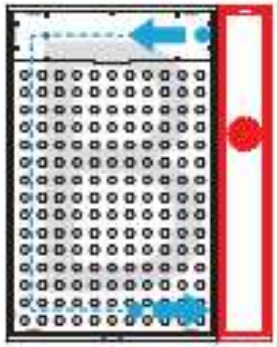

Lift B

9

Page 39–40

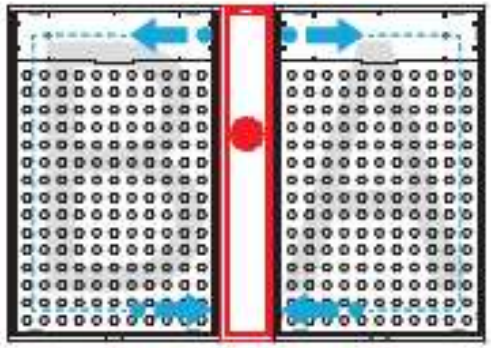

Lift C

10

Page 41–42

Lift E

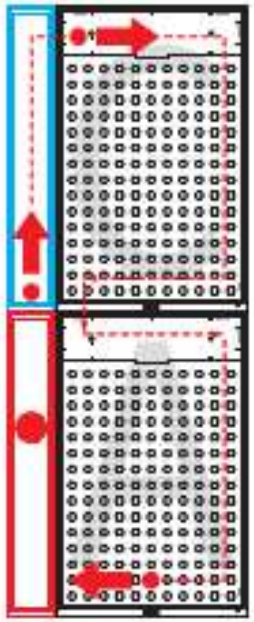

Lift D

11

Page 43–44

Lift F

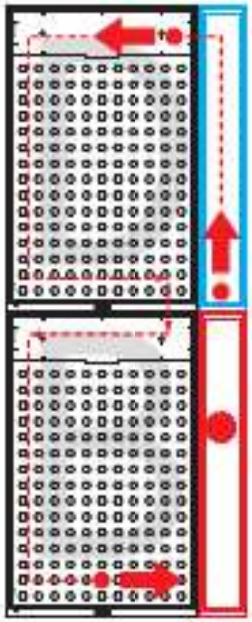

Lift D

12

Page 45–46

Lift G

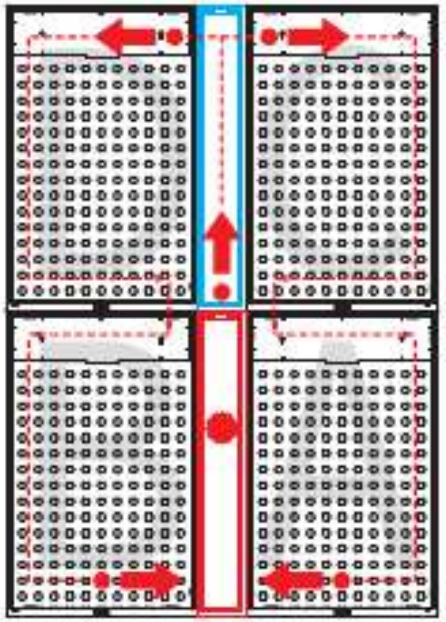

Lift D

13

Page 47–49

9 Advanced Play - Module Extension
(Assembly instruction for B)

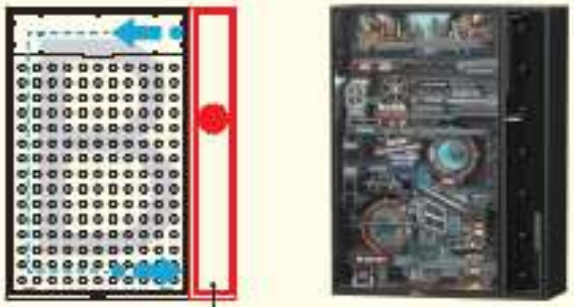

(Refer to the assembly instruction of Lift)

9
<1>

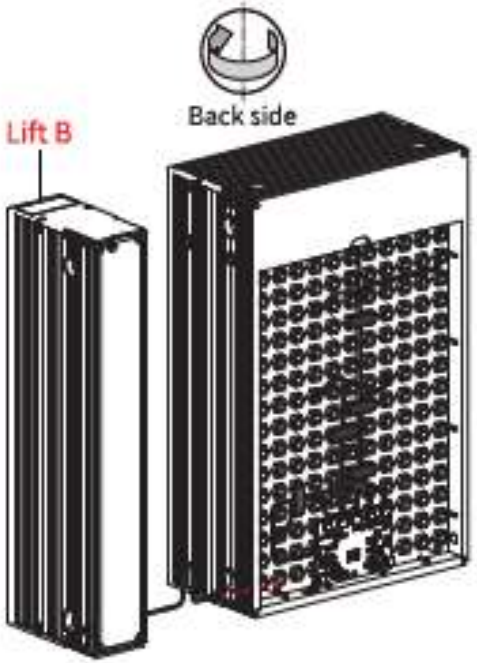

9
<2>

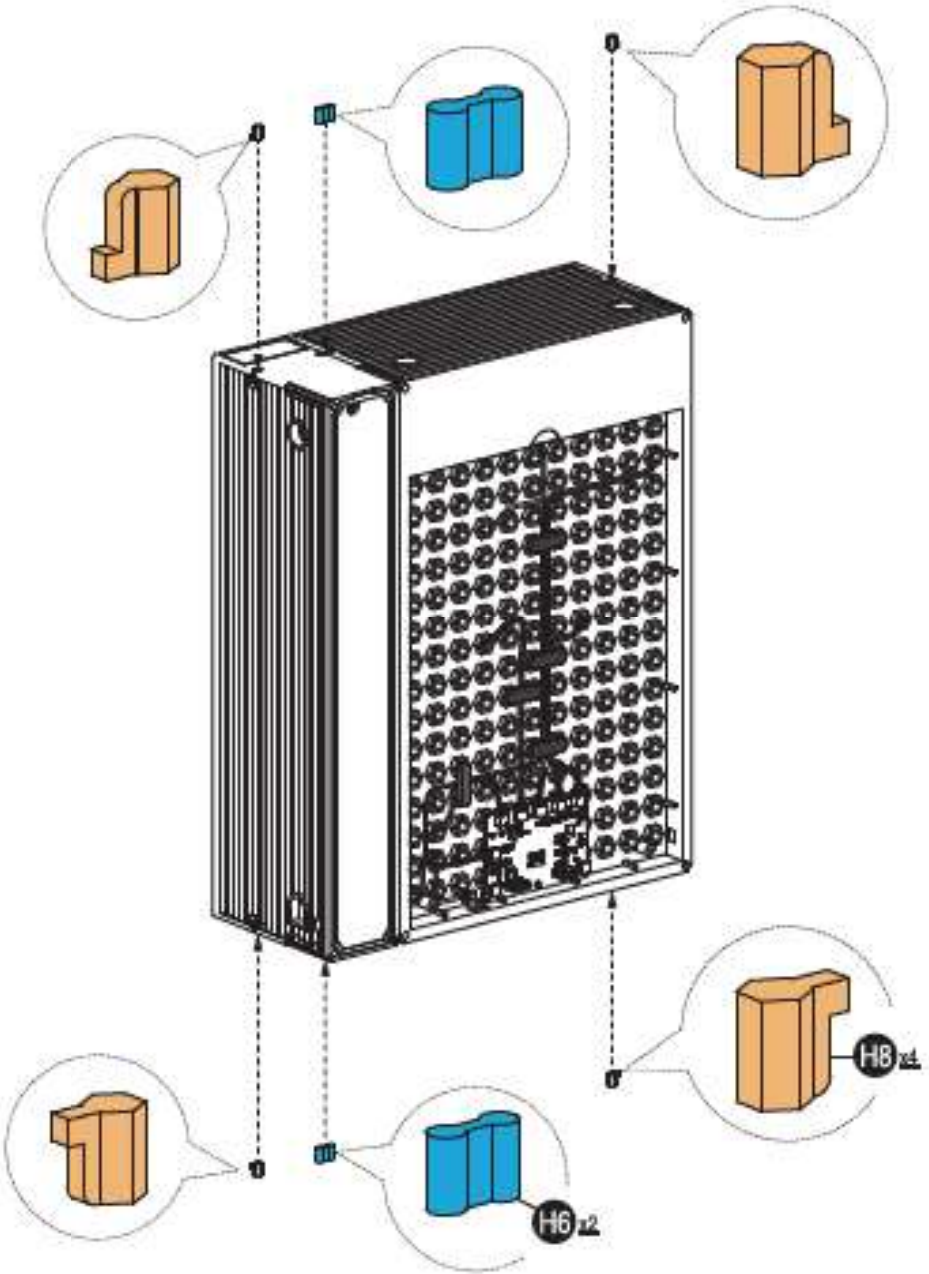

9

<3>

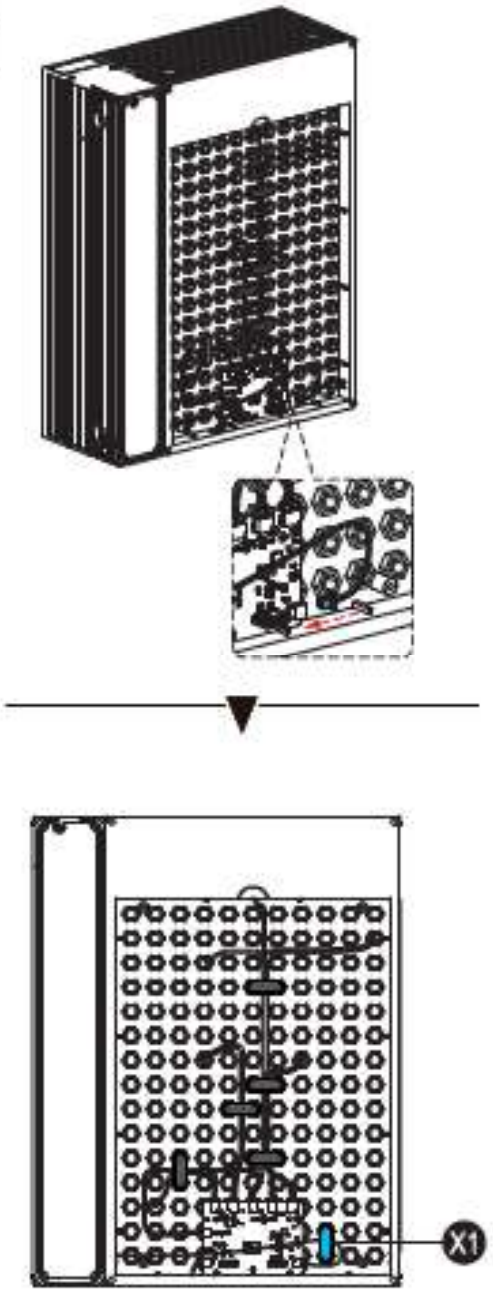

9

<4>

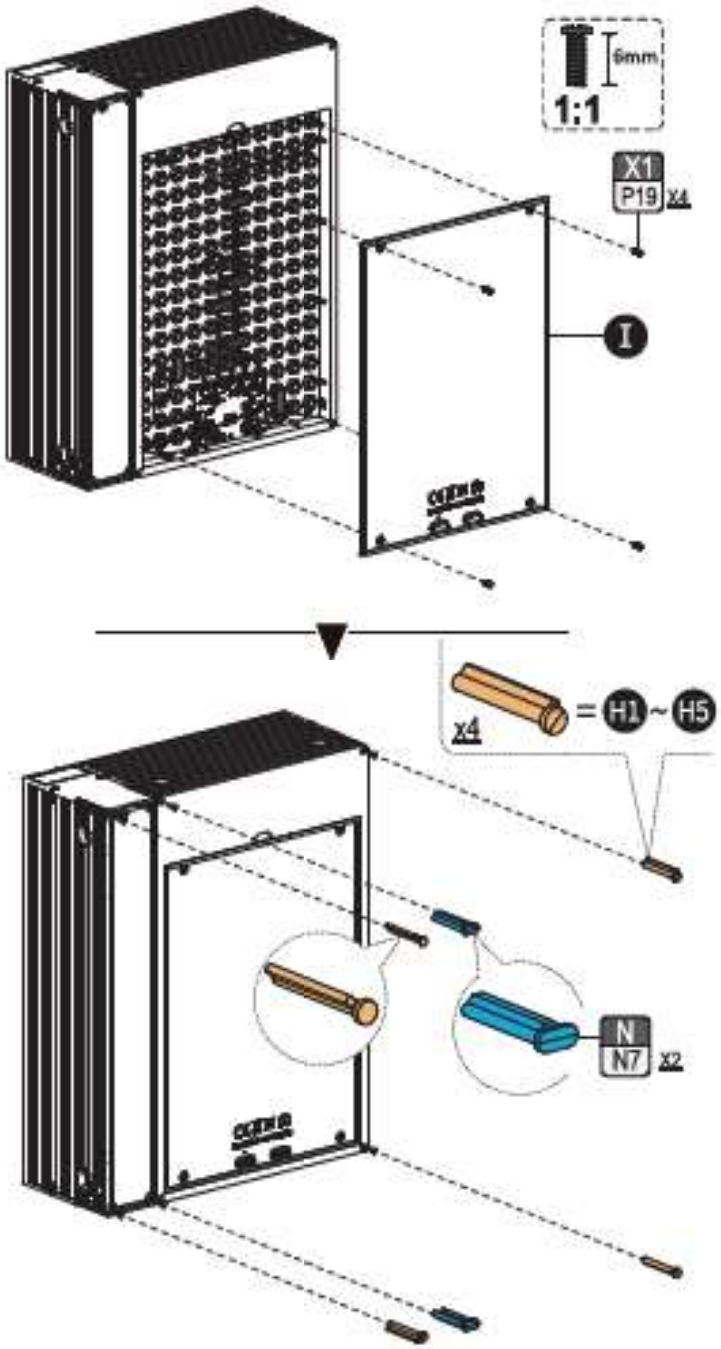

9

<5>

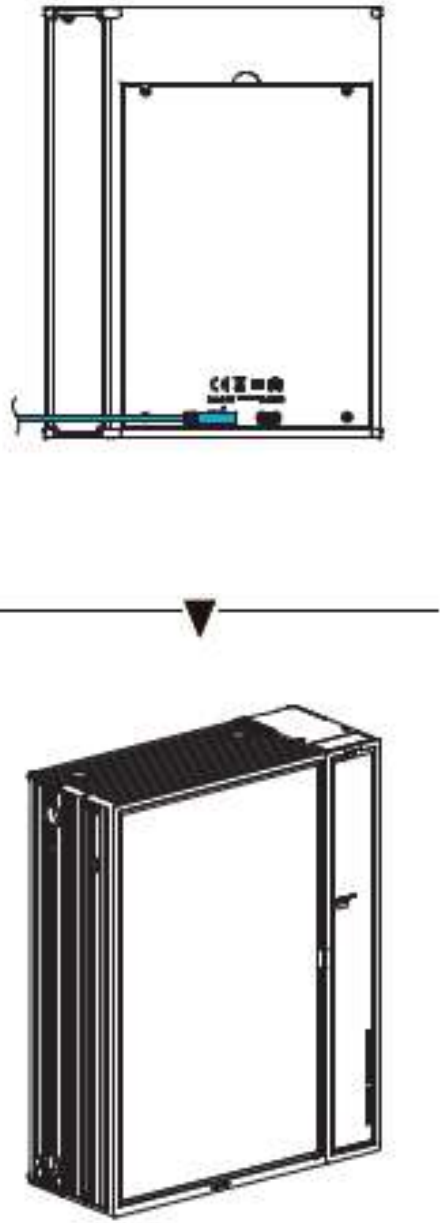

Complete position B

10 Advanced Play - Module Extension (Assembly instruction for AB)

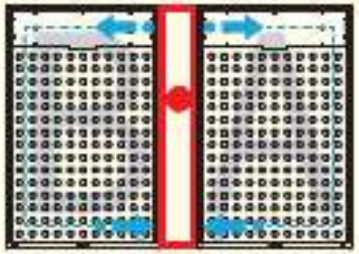

Lift C

(Refer to the assembly instruction of Lift)

Remove and replace corresponding parts of A: (Skip it if no needed.)

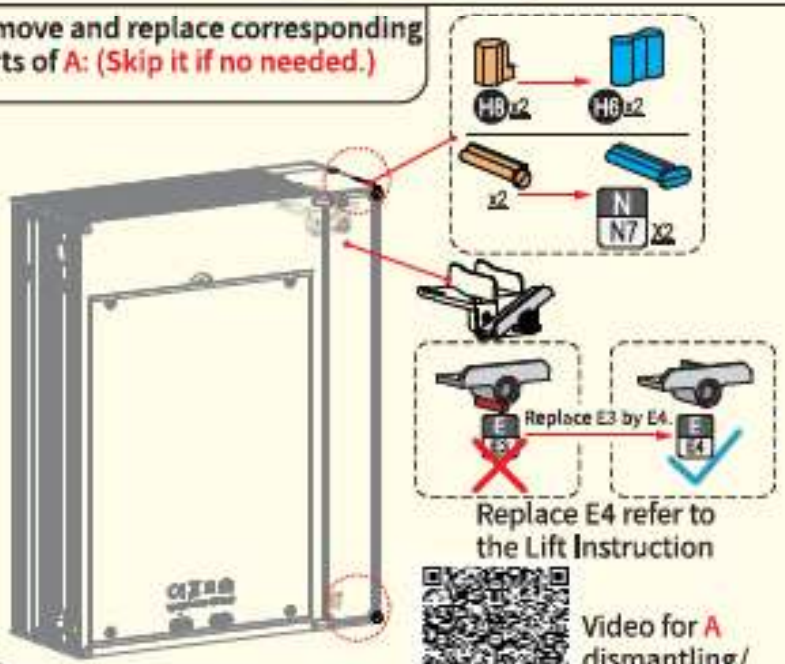

Replace E4 refer to the Lift Instruction

Video for A dismantling/ replacing

10 <1>

Before assembling, put marbles to test.
Do not reverse the positions of left and right modules.

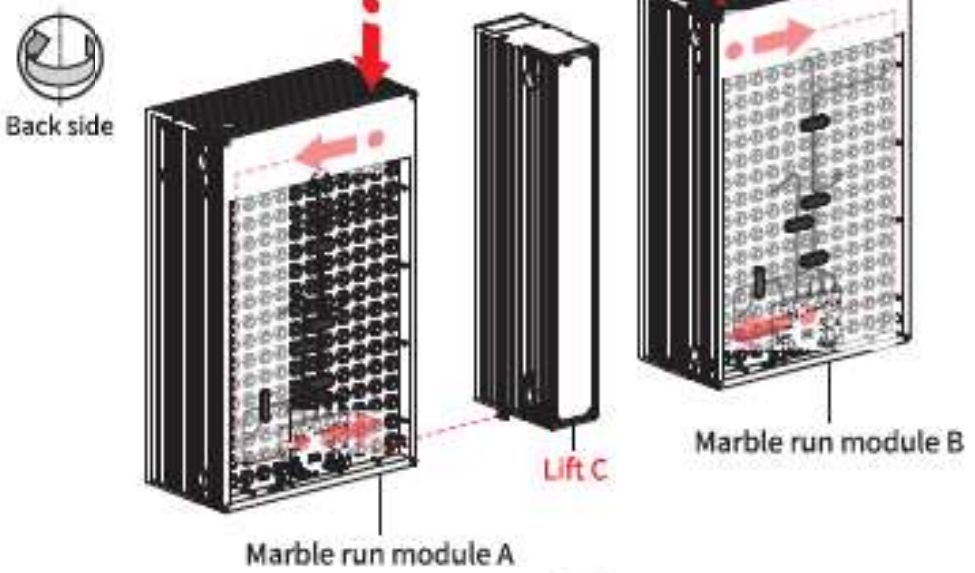

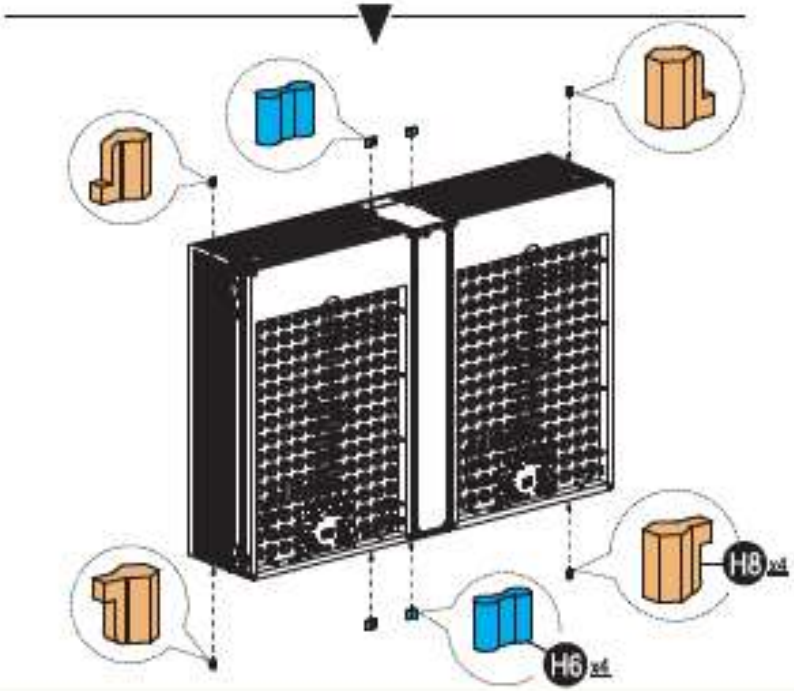

10
<2>

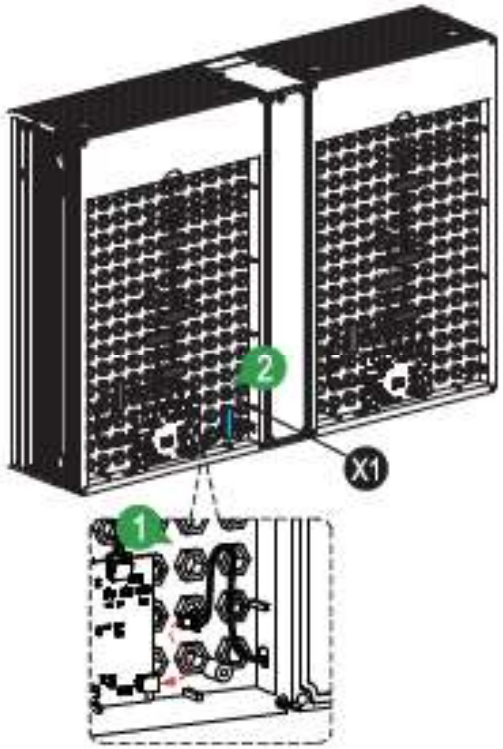

10
<3>

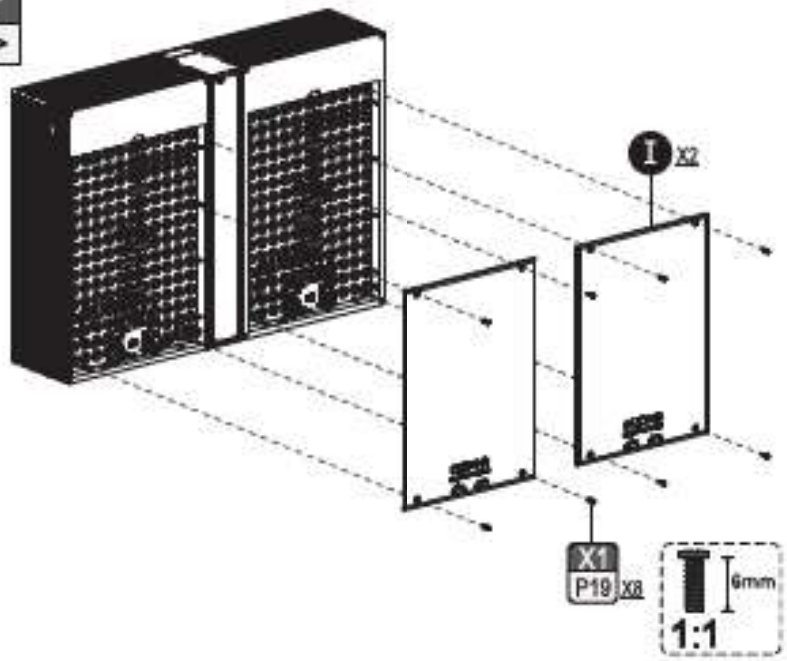

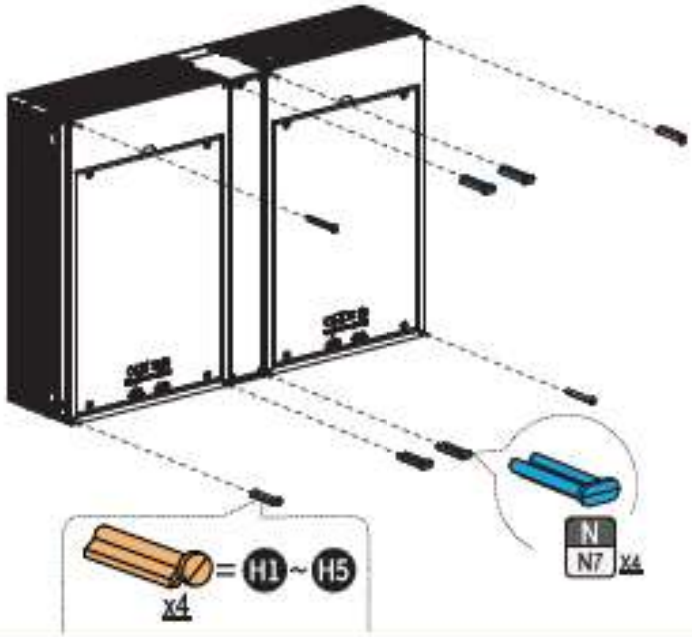

10
<4>

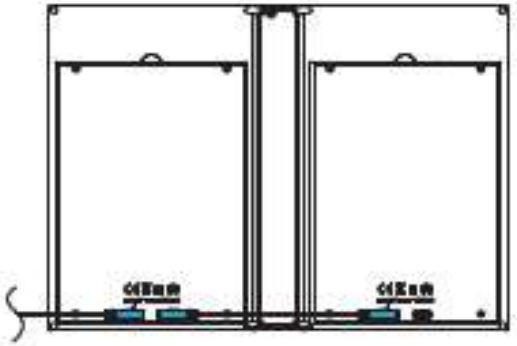

Complete position AB

11 Advanced Play – Module Extension (Assembly instruction for AC)

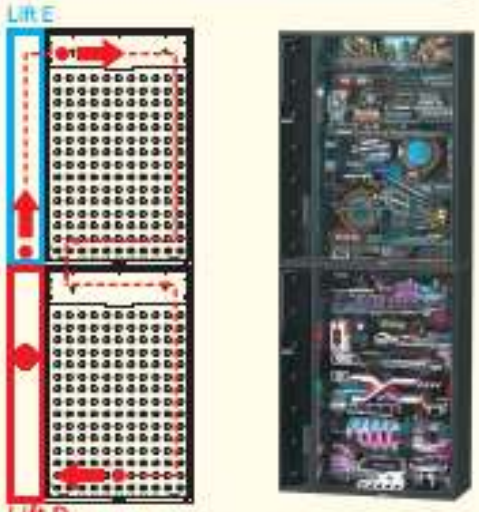

(Refer to the assembly instruction of Lift .)

Remove and replace corresponding parts of A: (Skip it if no needed.)

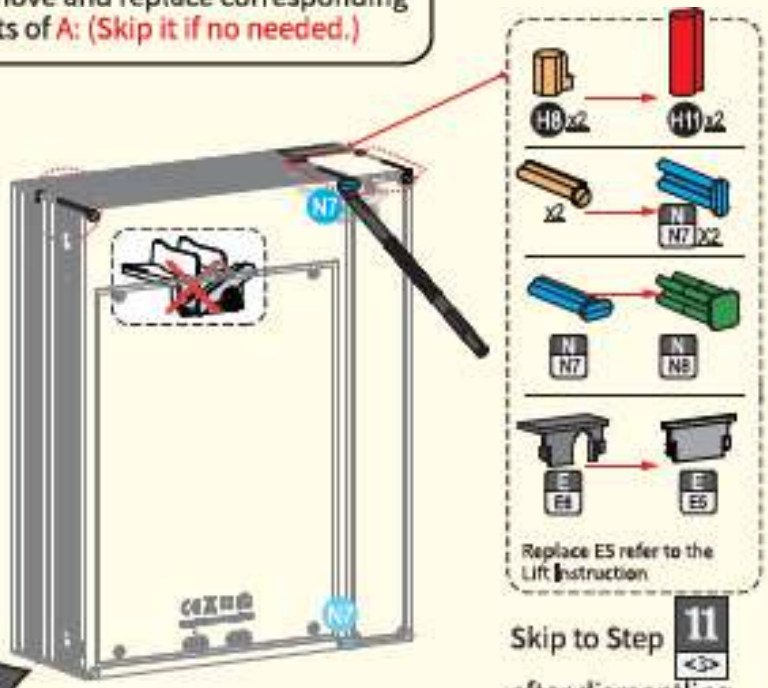

Skip to Step 11 <3> after dismantling.

11 <1>

Check the direction of the track.

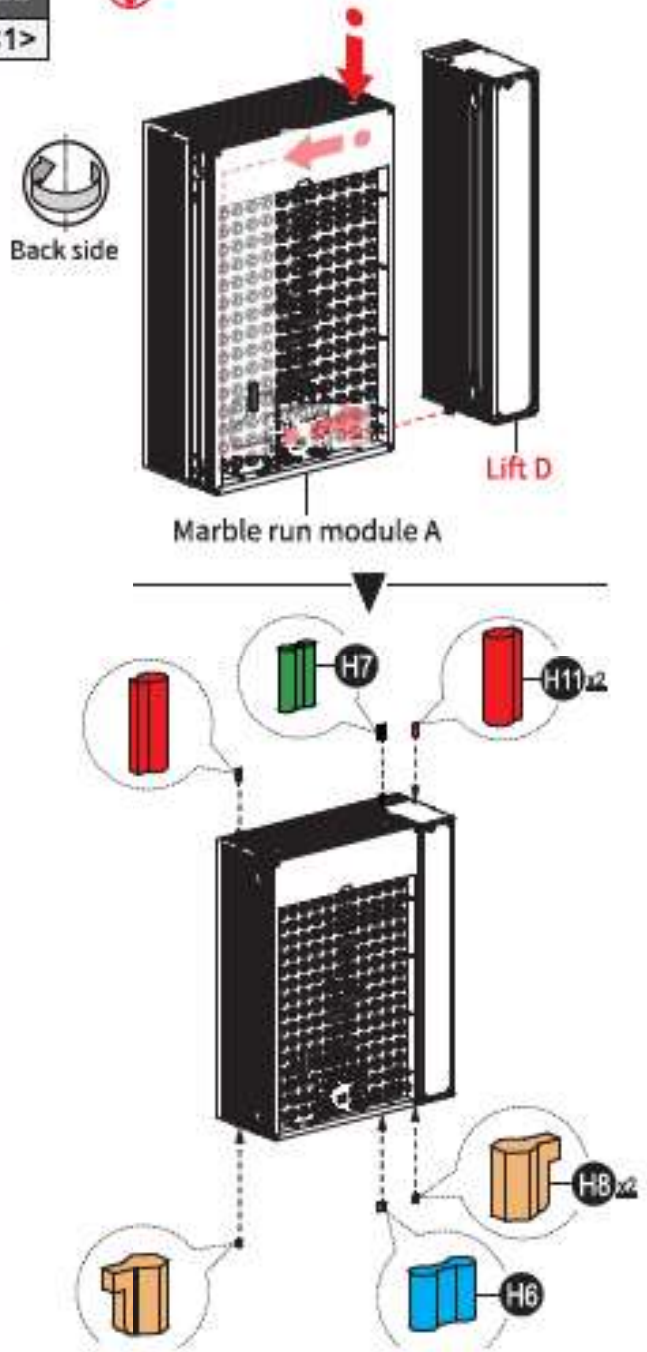

11 <2>

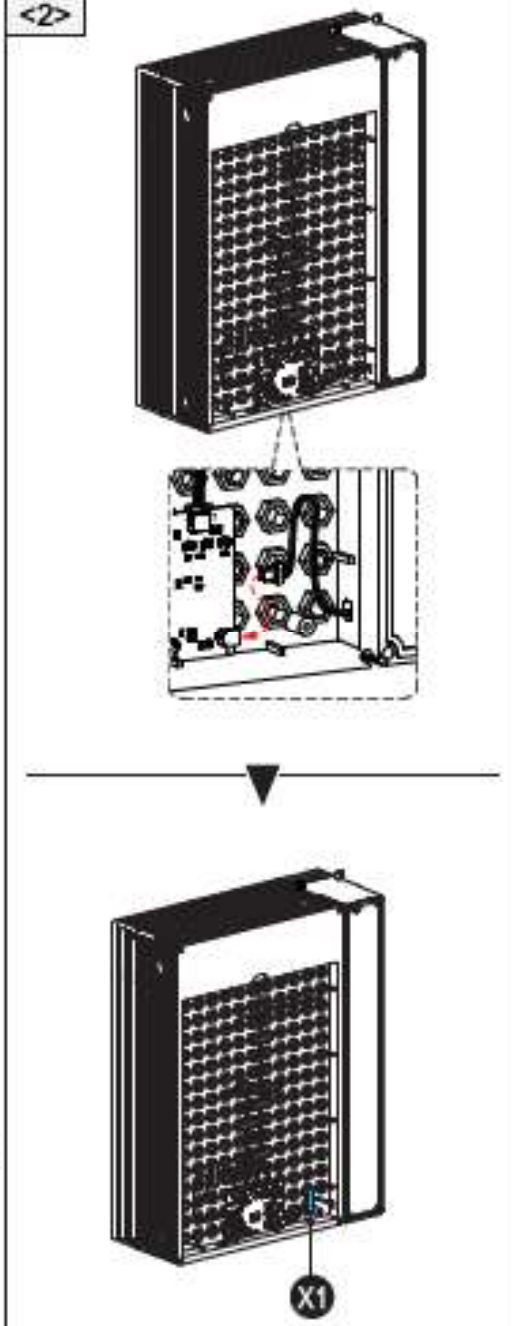

11

<3>

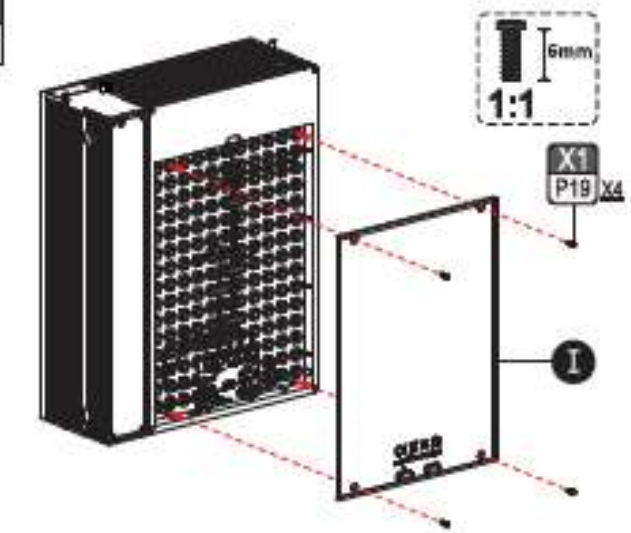
6mm
1:1
X1
P19 X4
I

Lift E
Remove the transparent cover of Lift E to assemble easily.

11

<4>

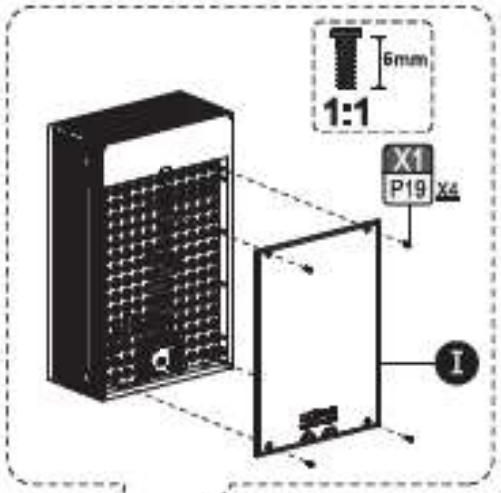
6mm
1:1
X1
P19 X4
I

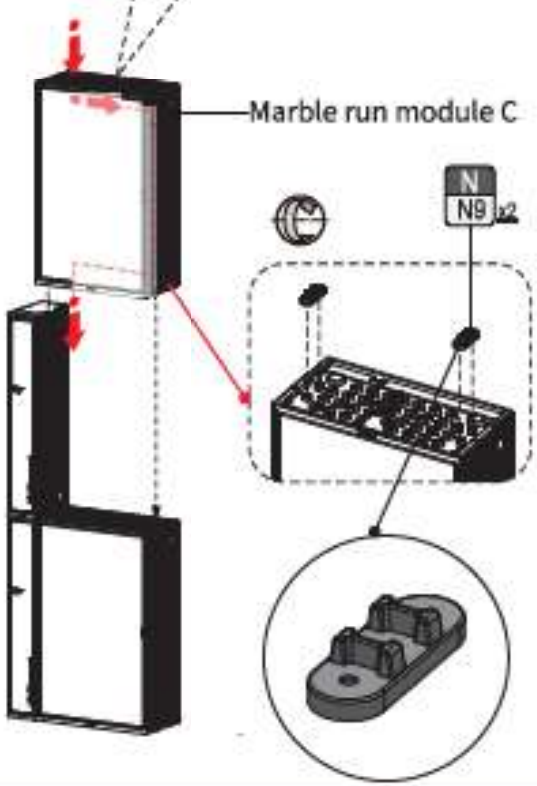
Marble run module C
N
N9 x2

11

<5>

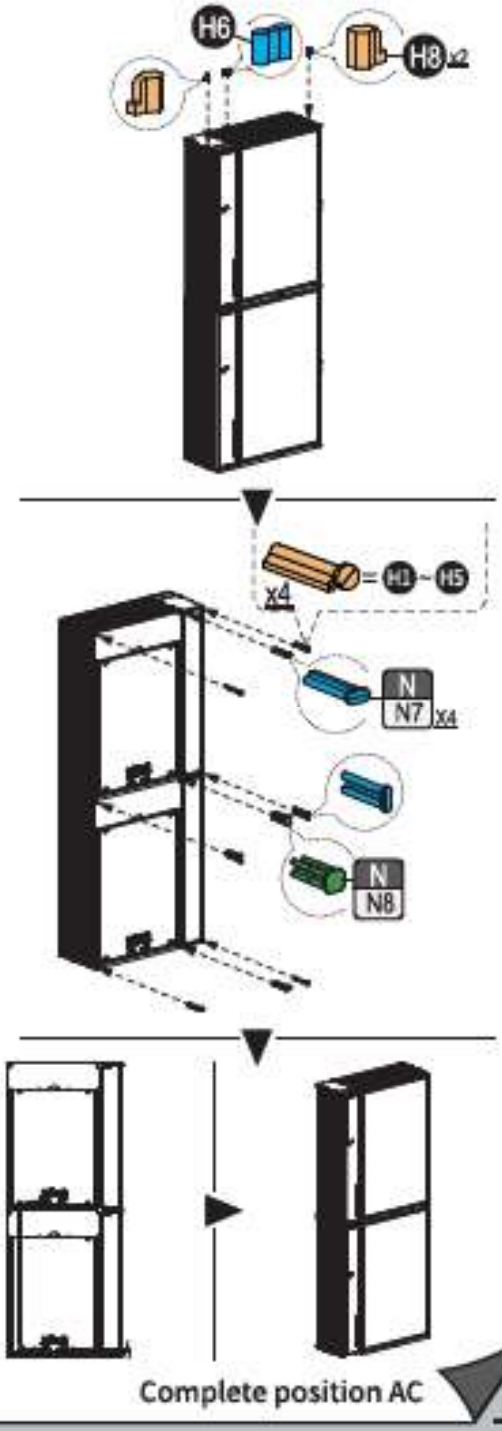
H6
H8 x2
x4
= H1 ~ H5
N
N7 X4
N
N8
Complete position AC

12 Advanced Play - Module Extension
(Assembly instruction for BD)

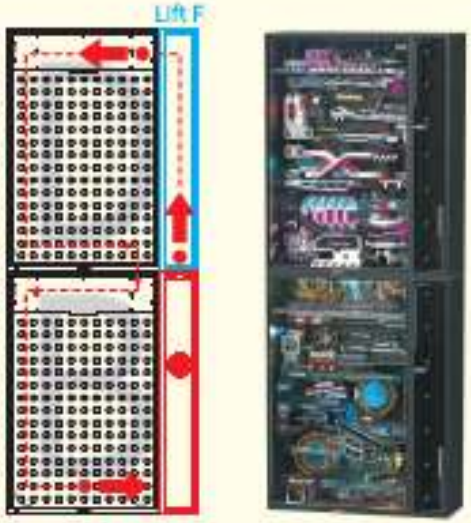

Lift D (Refer to the assembly instruction of Lift .)

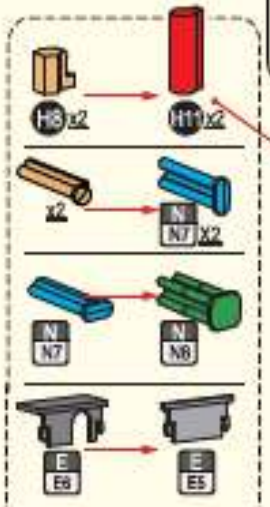

Remove and replace corresponding parts of B: (Skip it if no needed.)

Skip to Step 12 <3> after dismantling.

12 <1>

Check the direction of the track.

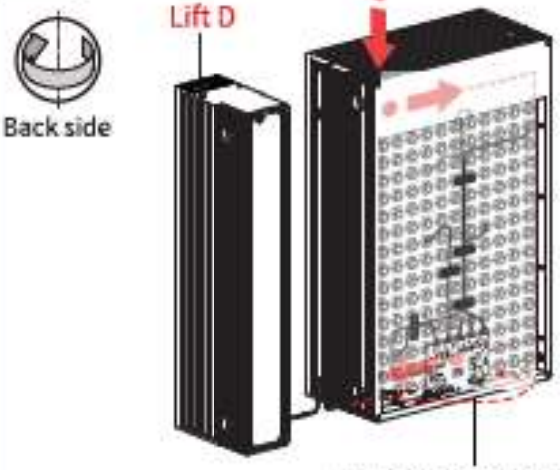

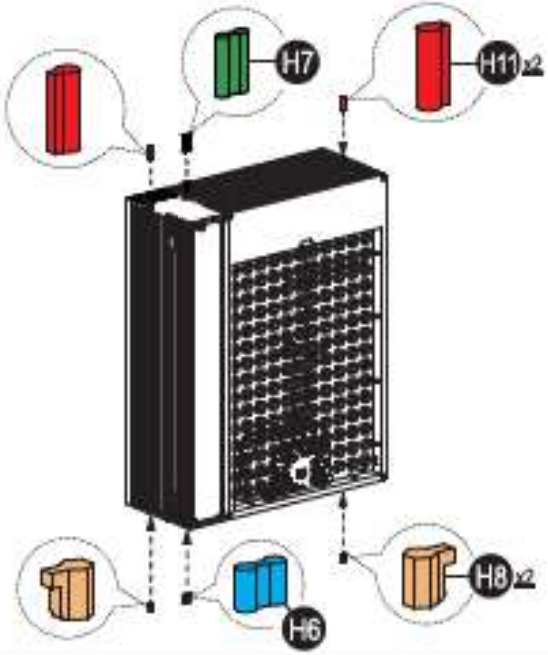

12 <2>

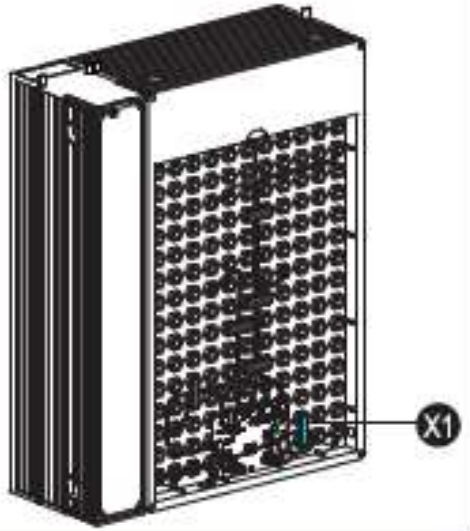

12

<3>

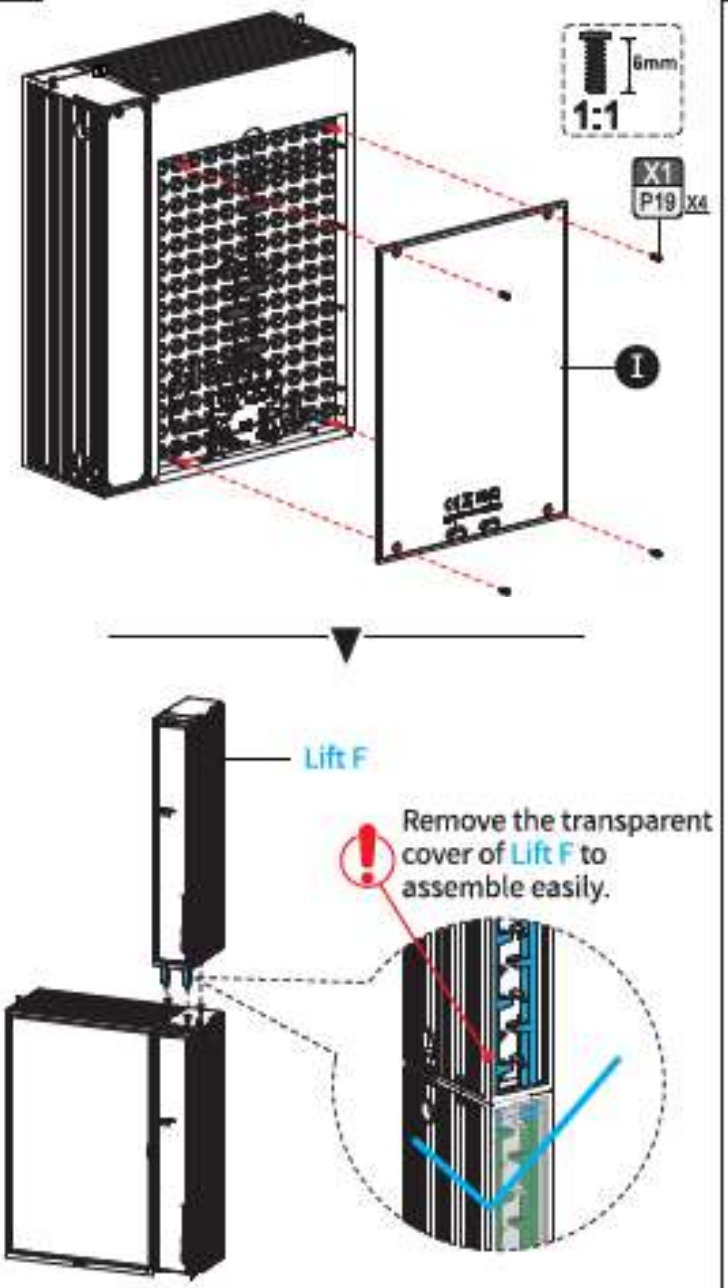
6mm
1:1
X1
P19 X4
I
Lift F
Remove the transparent cover of Lift F to assemble easily.

12

<4>

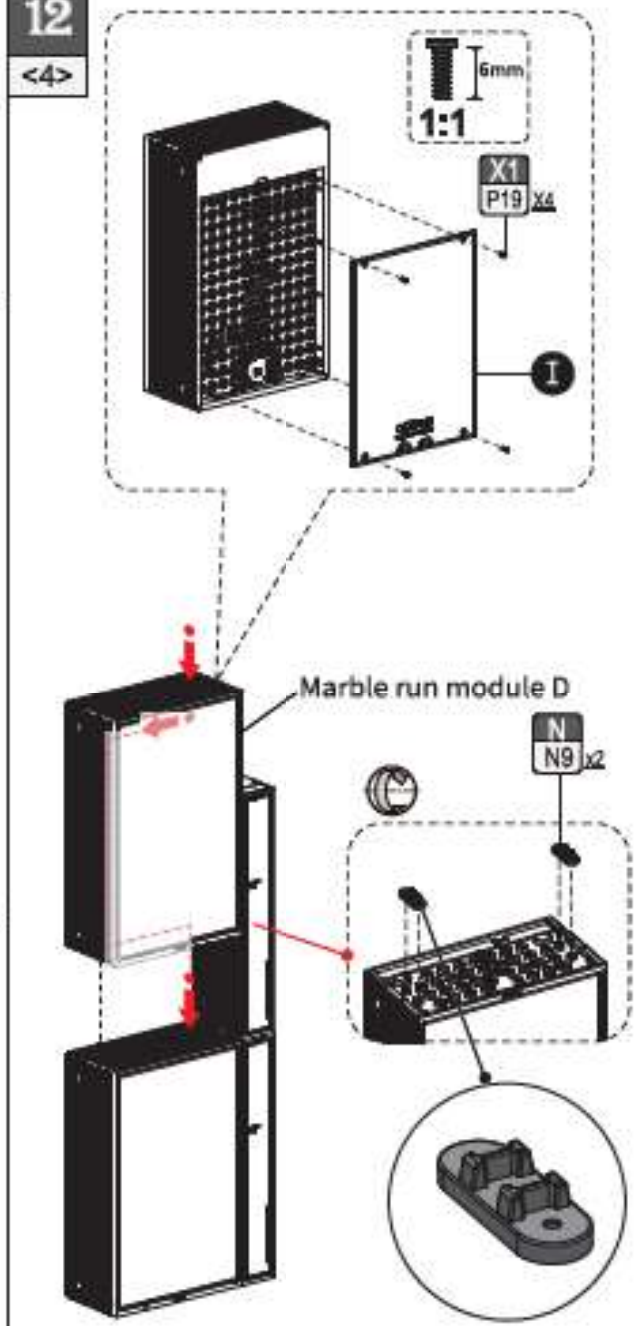
6mm
1:1
X1
P19 X4
I
Marble run module D
N
N9 x2

12

<5>

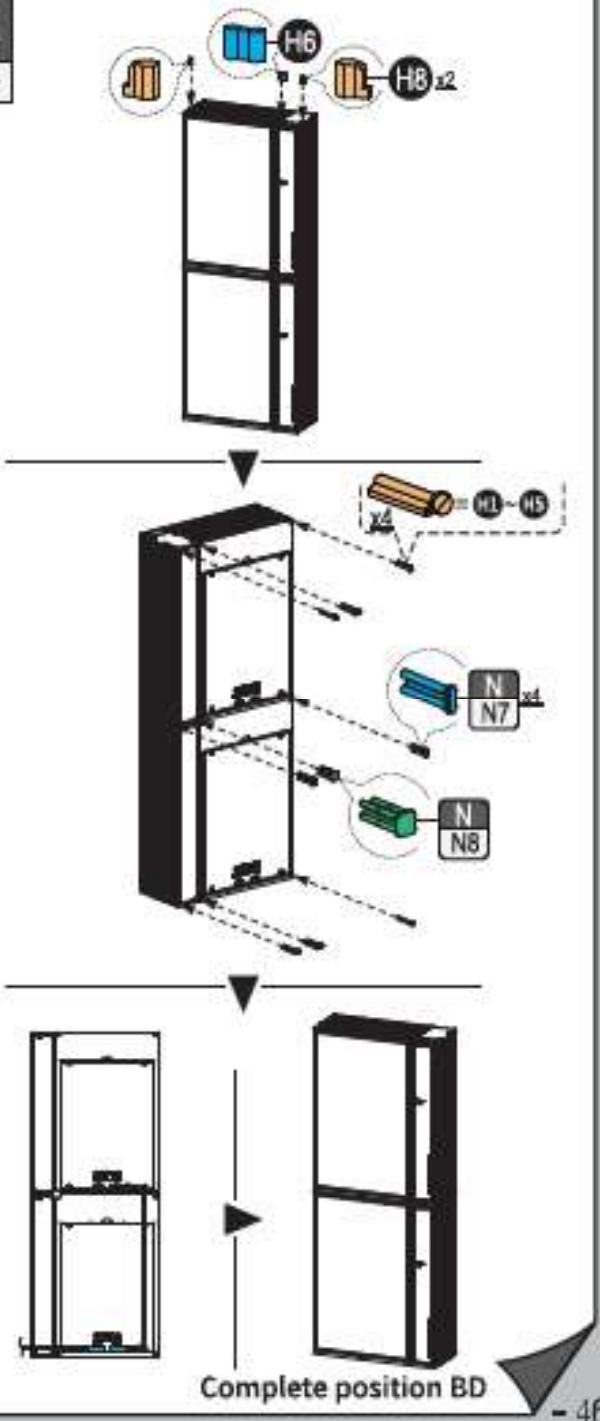
H6
H8 x2
x4
H1 ~ H5
N
N7 x4
N
N8
Complete position BD

13 Advanced Play – Module Extension (Assembly instruction for ABCD)

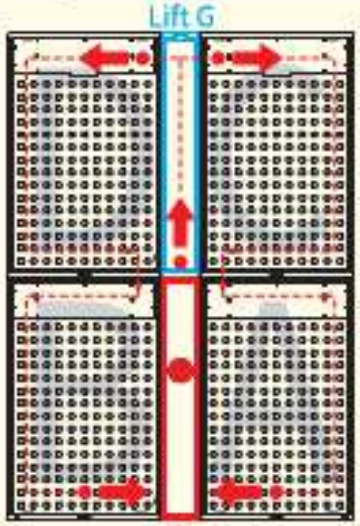

(Refer to the assembly instruction of Lift .)

Remove and replace corresponding parts of AB: (Skip it if no needed.)

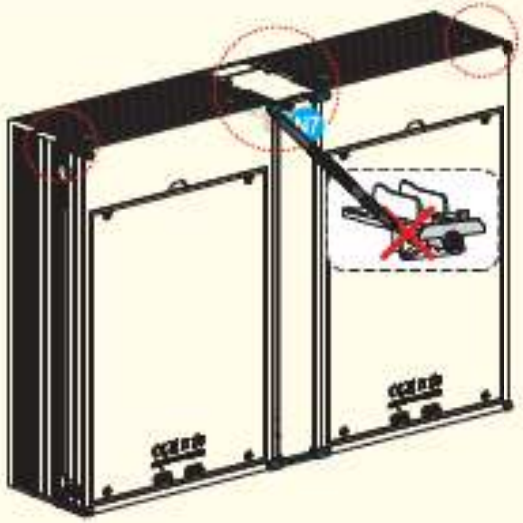

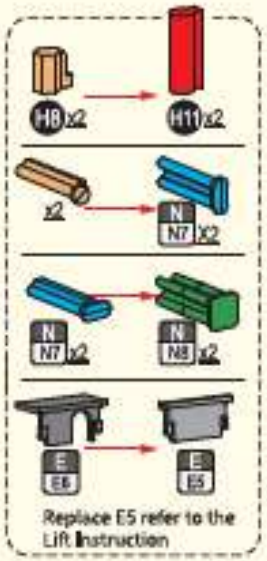

Skip to Step 13 after dismantling.

Remove and replace corresponding parts of AC: (Skip it if no needed.)

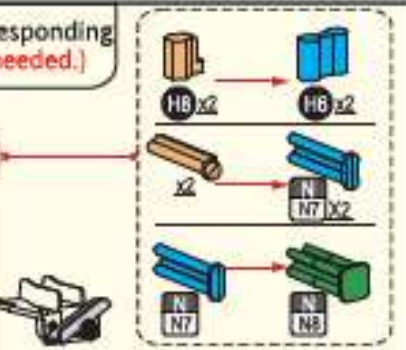

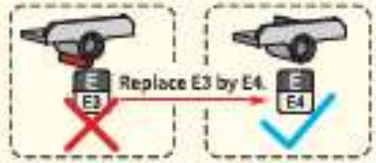

Replace E4 refer to the Lift Instruction

Video for AC dismantling/ replacing

13 <1>

Back side

Check the direction of the track.

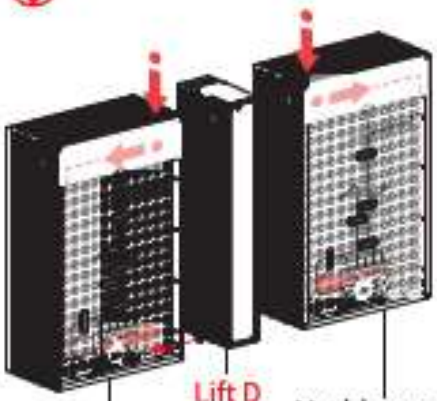

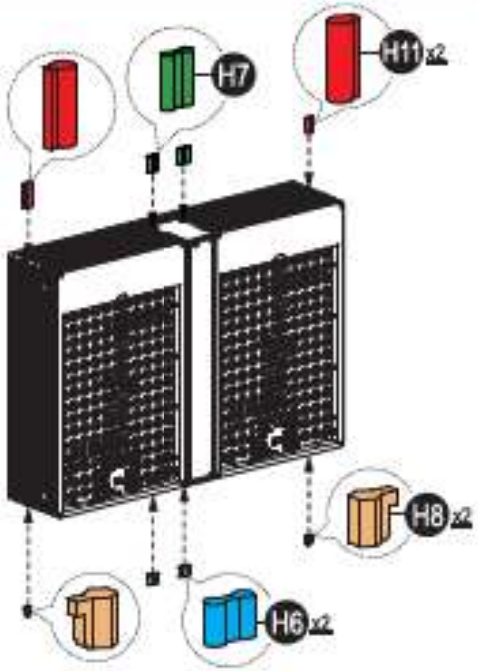

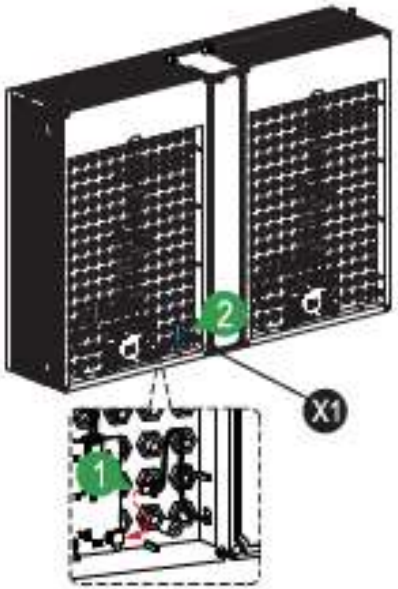

13

<2>

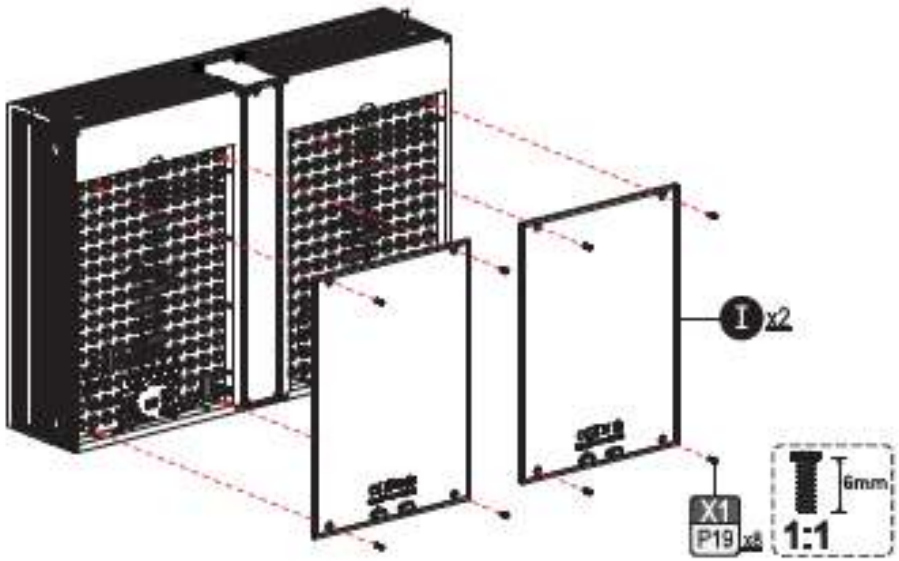
I x2
X1
P19 x8
6mm
1:1

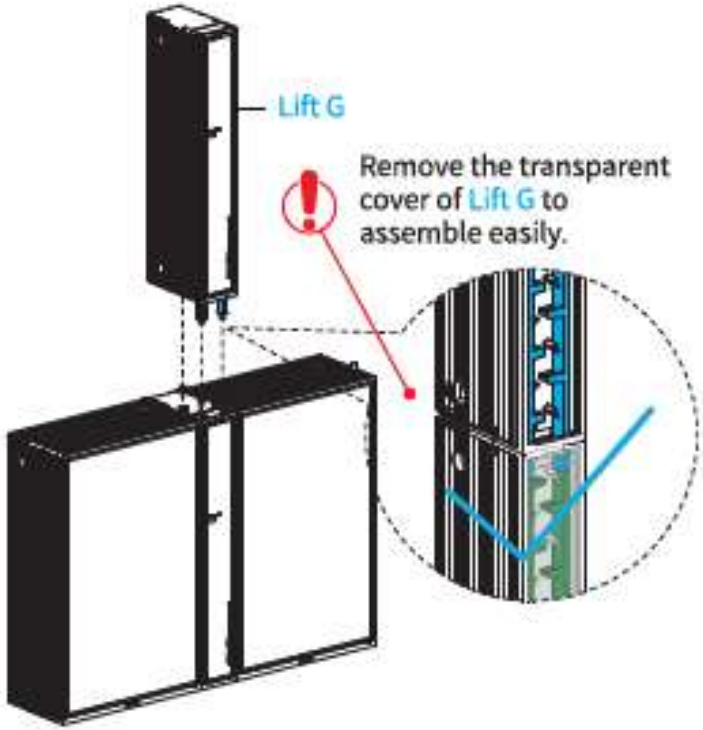
Lift G
Remove the transparent cover of Lift G to assemble easily.

13

<3>

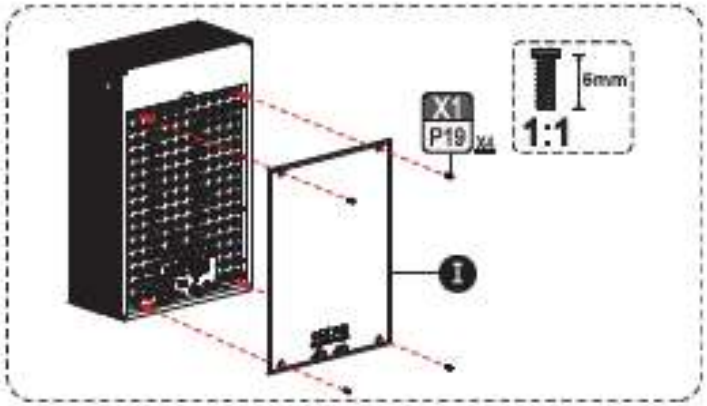
X1
P19 x4
6mm
1:1
I

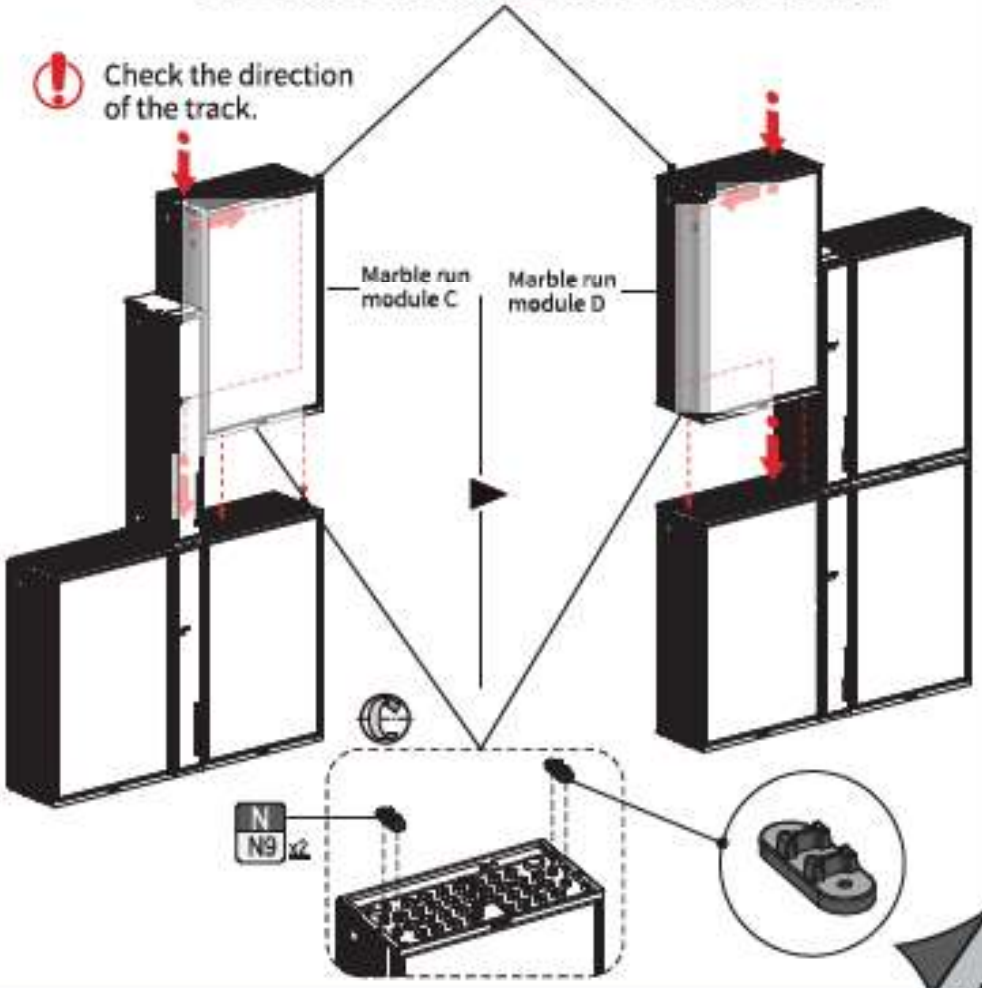
Check the direction of the track.
Marble run module C
Marble run module D
N
N9 x2

13

<4>

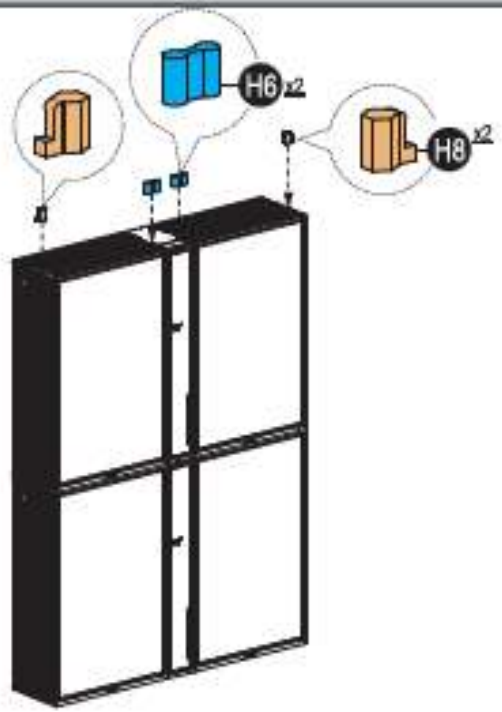

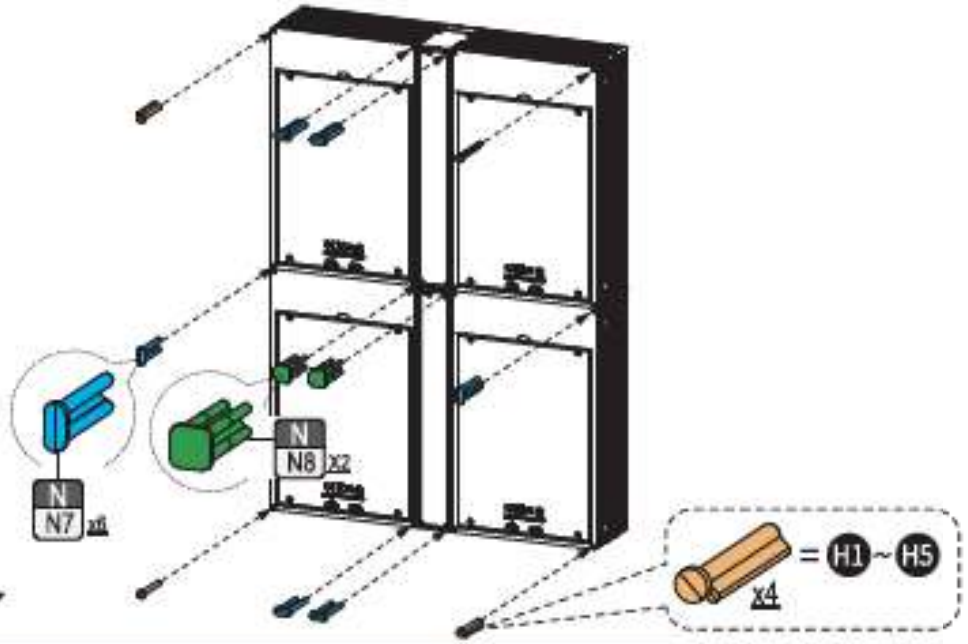

13

<5>

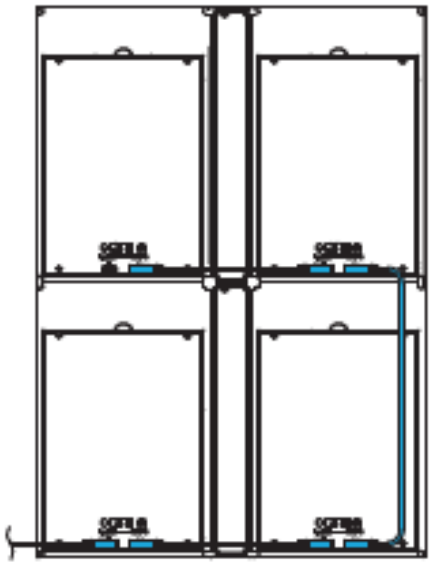

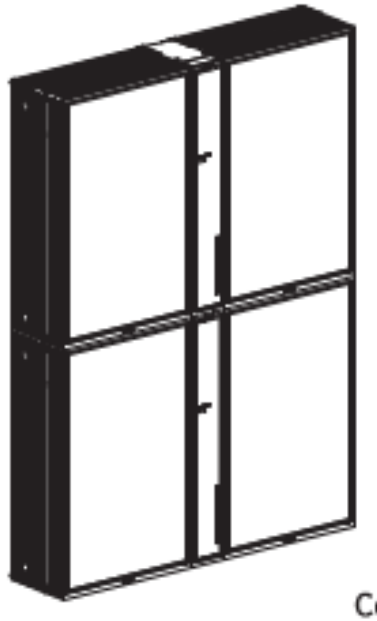

Complete.

PARALLEL WORLD

MARBLE RUN

Module Swap

Video for dismantling/
replacing in Advanced play

Attention:

1. 2 modes:
- Marble rolling: The light flashes, the Lift works and marbles begin to run cyclically. It will automatically power off after running for 10 minutes.
- Lighting display: The light flashes, the Lift stops and marbles stop running. It will not automatically power off .

2. Switch on/off:

Touch the button of any marble run module can control all connected modules.

3. Please keep the tool kit of the product well for later maintenance.
4. Keep the remaining parts well for extension playing.

ROKR

PARALLEL WORLD

MARBLE RUN

MR01 THE LAST CITY

ROKR Facebook

www.robotime.com

49.1MR010.100.B