# Inverted F Antenna Specification

## Summary

| ITEM | ANT SPEC | | | | | |
|---|---|---|---|---|---|---|
| Model Name | 2.4G ANT | | | | | |
| Center Frequency | Horizontal | | | Vertical | | |
| | 2400MHz | 2450MHz | 2500MHz | 2400MHz | 2450MHz | 2500MHz |
| | -1.26 | -0.76 | -0.58 | -5.25 | -2.46 | -1.86 |
| MAX. Gain | -0.58dBi | | | | | |
| Polarization | Horizontal and Vertical | | | | | |
| Azimuth Beam Pattern | Omni-directional | | | | | |
| Impedance | 50 Ohm | | | | | |
| Antenna Length | 15.2mm | | | | | |
| Manufacture | ZHUHAI JIELI TECHNOLOGY CO.,LTD | | | | | |

## Antenna Photo & Length (mm)

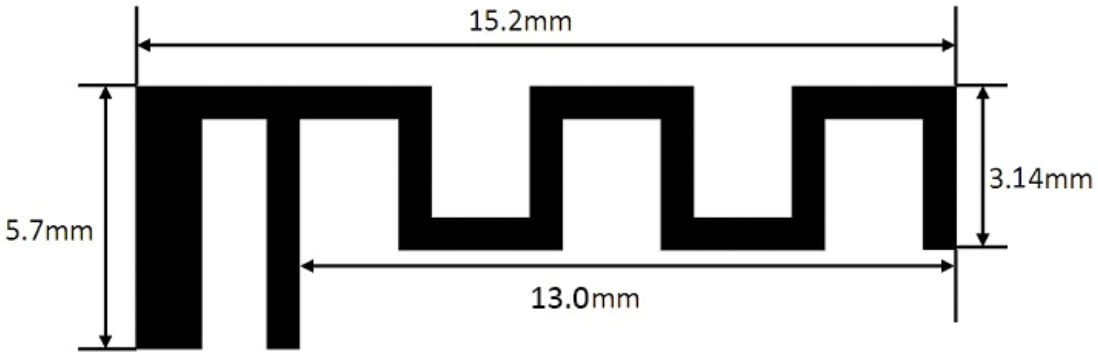

Horizontal: 2400 MHz 2450 MHz 2500 MHz

**Power (dBm)**

Max: 0 Min: -40 Scale: 5/div

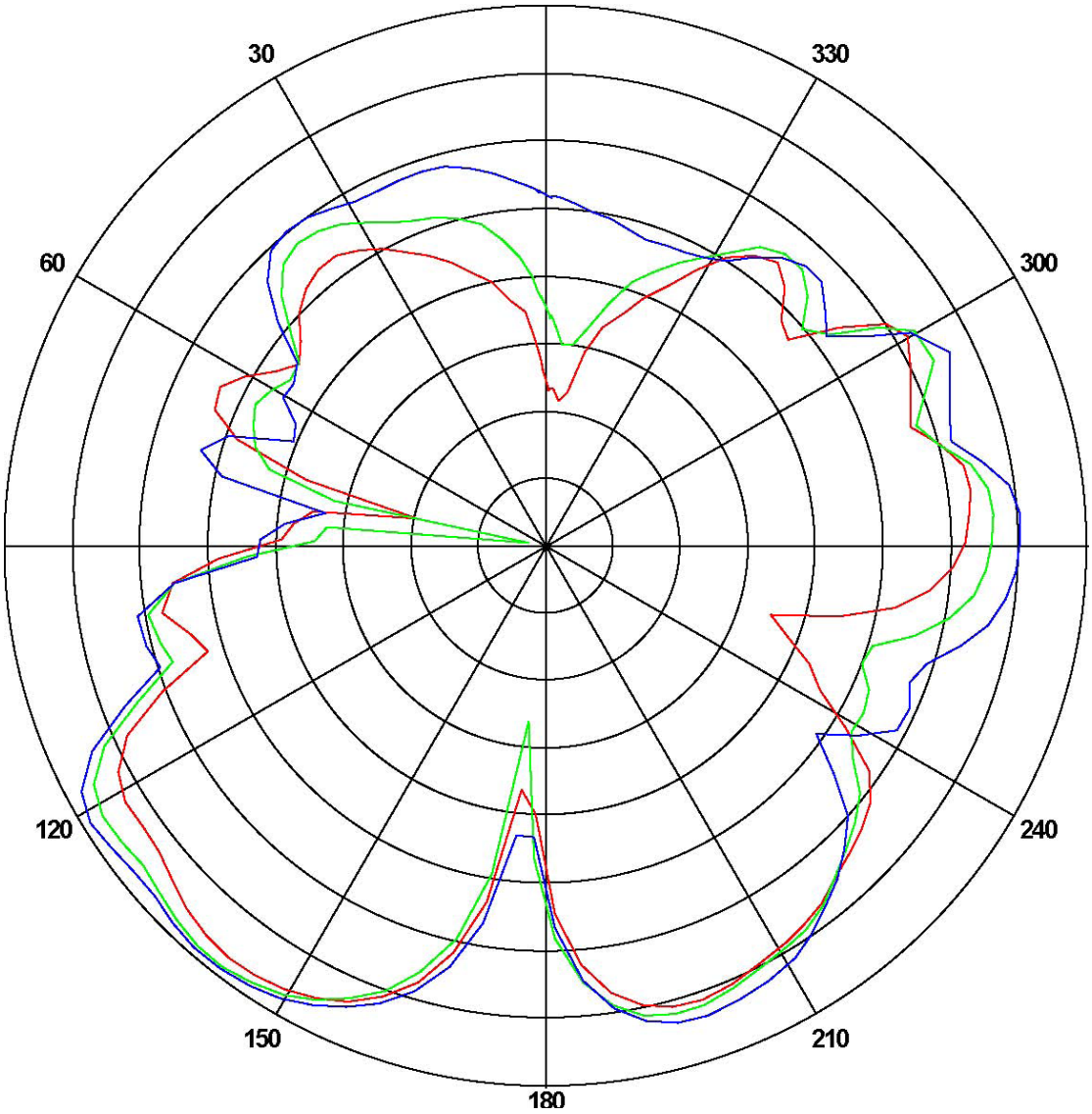


| Frequency (MHz) | Gain(dBi) | | |
|---|---|---|---|
| | Max | Min | Avg |
| 2400 | -1.26174 | -30.0801 | -7.18716 |
| 2450 | -0.765802 | -36.5604 | -7.48023 |
| 2500 | -0.585582 | -22.0315 | -6.59127 |

Vertical: 2400 MHz 2450 MHz 2500 MHz
Power (dBm)
Max: 0 Min: -30 Scale: 5/div

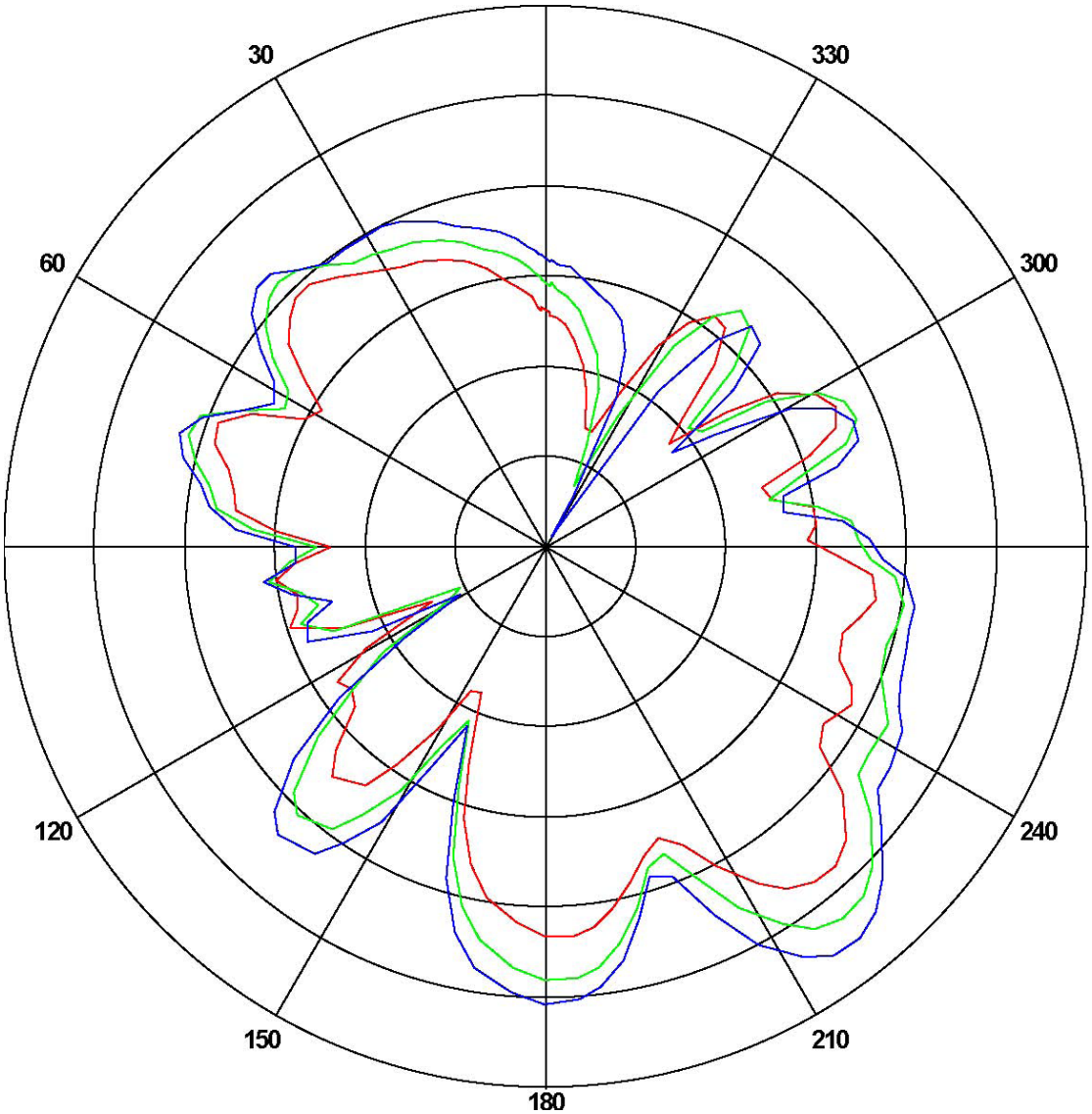


| Frequency (MHz) | Gain(dB) | | |
|---|---|---|---|
| | Max | Min | Avg |
| 2400 | -5.2537 | -22.1424 | -12.4294 |
| 2450 | -2.4652 | -24.5837 | -10.4702 |
| 2500 | -1.86120 | -29.5214 | -9.20432 |

ANT Test Labs：Attestation of Global Compliance Co., Ltd.