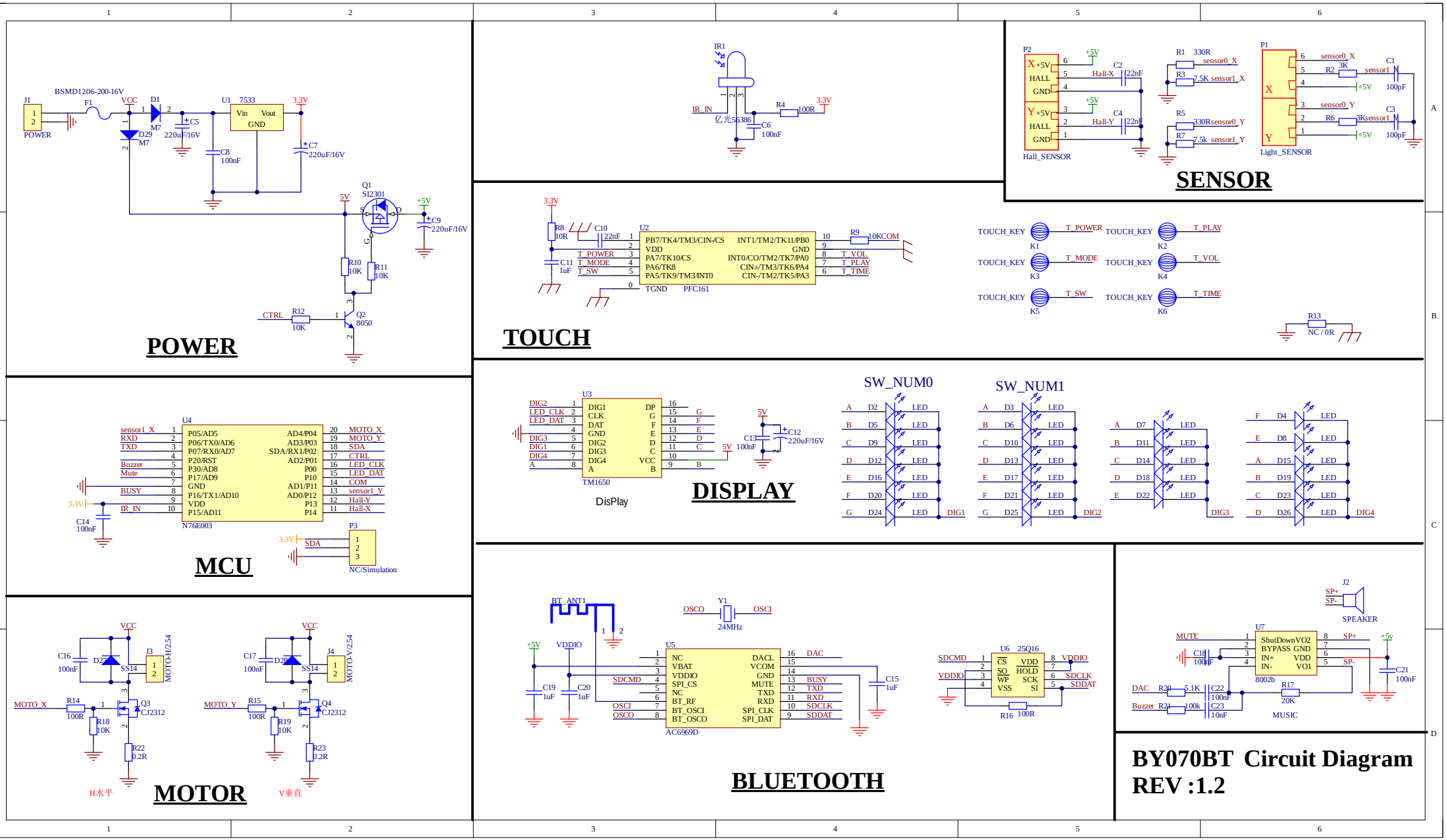
POWER
BSMD1206-200-16V
J1
F1
VCC
D1
M7
D29
M7
C5
220uF/16V
U1 7533
Vin Vout
GND
3.3V
C8
100nF
C7
220uF/16V
Q1
SI2301
5V
+5V
C9
220uF/16V
R10
10K
R11
10K
CTRL
R12
10K
Q2
8050
IR1
IR_IN
亿光56386
R4
100R
C6
100nF
SENSOR
P2
Hall_SENSOR
HALL
GND
Hall-X
Hall-Y
C2
22nF
C4
22nF
R1 330R
R3 7.5K
R5 330R
R7 7.5k
sensor0_X
sensor1_X
sensor0_Y
sensor1_Y
P1
Light_SENSOR
R2 3K
R6 3K
C1
100pF
C3
100pF
TOUCH
U2
PB7/TK4/TM3/CIN-/CS
VDD
PA7/TK10/CS
PA6/TK8
PA5/TK9/TM3/INT0
TGND
PFC161
INT1/TM2/TK11/PB0
GND
INT0/CO/TM2/TK7/PA0
CIN+/TM3/TK6/PA4
CIN-/TM2/TK5/PA3
R8
10R
C10
22nF
C11
1uF
T_POWER
T_MODE
T_SW
R9
10KCOM
T_VOL
T_PLAY
T_TIME
TOUCH_KEY
K1
K2
K3
K4
K5
K6
R13
NC / 0R
MCU
U4
N76E003
P05/AD5
P06/TX0/AD6
P07/RX0/AD7
P20/RST
P30/AD8
P17/AD9
GND
P16/TX1/AD10
VDD
P15/AD11
AD4/P04
AD3/P03
SDA/RX1/P02
AD2/P01
P00
P10
AD1/P11
AD0/P12
P13
P14
sensor1_X
RXD
TXD
Buzzer
Mute
BUSY
IR_IN
MOTO_X
MOTO_Y
SDA
COM
sensor1_Y
Hall-Y
Hall-X
C14
100nF
P3
NC/Simulation
DISPLAY
U3
TM1650
DIG1
CLK
DAT
GND
DIG2
DIG3
DIG4
A
DP
G
F
E
D
C
VCC
B
LED_CLK
LED_DAT
C13
100nF
C12
220uF/16V
SW_NUM0
SW_NUM1
LED
DIG1
DIG2
DIG3
DIG4
MOTOR
VCC
C16
100nF
C17
100nF
D27
D28
SS14
J3
J4
MOTO-H/2.54
MOTO-V/2.54
MOTO_X
MOTO_Y
R14
100R
R15
100R
R18
10K
R19
10K
Q3
CJ2312
Q4
CJ2312
R22
0.2R
R23
0.2R
H水平
V垂直
BLUETOOTH
BT_ANT1
OSCO
OSCI
Y1
24MHz
+5V
VDDIO
C19
1uF
C20
1uF
C15
1uF
U5
AC6969D
NC
VBAT
VDDIO
SPI_CS
NC
BT_RF
BT_OSCI
BT_OSCO
DACL
VCOM
GND
MUTE
TXD
RXD
SPI_CLK
SPI_DAT
DAC
BUSY
SDCLK
SDDAT
SDCMD
U6 25Q16
CS
SO
WP
VSS
VDD
HOLD
SCK
SI
R16
100R
SPEAKER
J2
SP+
SP-
U7
8002b
ShutDown
BYPASS
IN+
IN-
VO2
VO1
C18
100nF
C21
100nF
R20
5.1K
R21
100k
C22
100nF
C23
10nF
R17
20K
MUSIC
BY070BT Circuit Diagram
REV :1.2