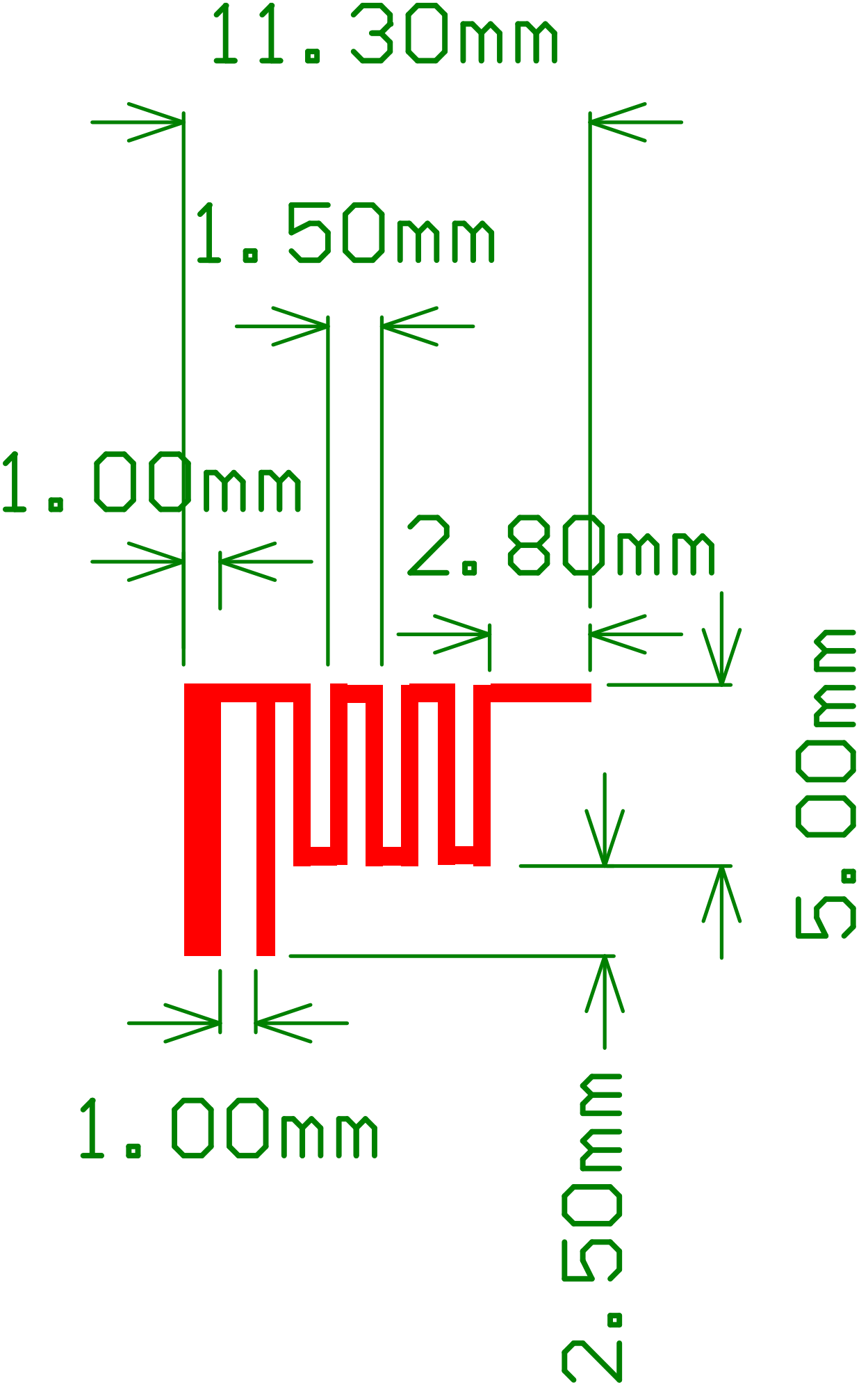
11.30mm
1.50mm
1.00mm
2.80mm
5.00mm
1.00mm
2.50mm

All measurements were performed radiated and therefore additional antenna gain documentation is not required.