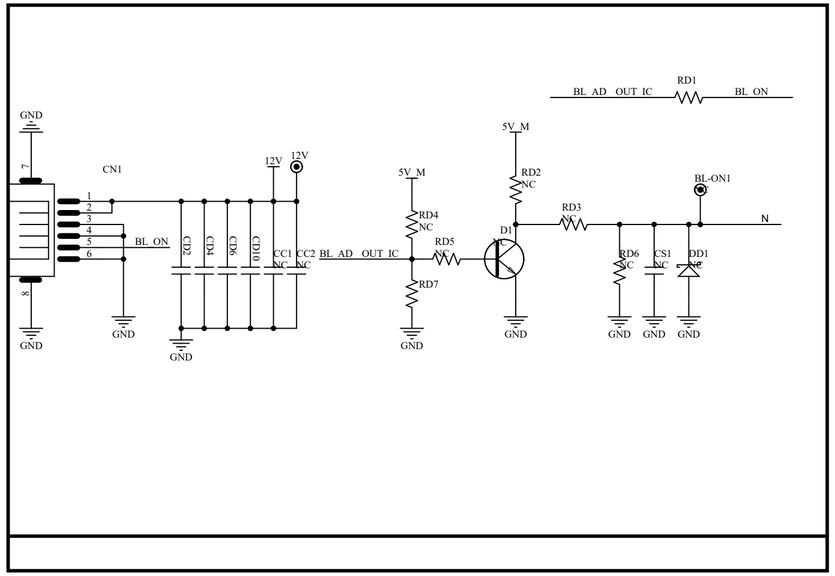
BL_AD_OUT_IC
RD1
BL_ON
GND
CN1
12V
5V_M
RD2
NC
BL-ON1
RD3
N
BL_ON
CD2
CD4
CD6
CD10
CC1
CC2
RD4
RD5
RD7
D1
RD6
CS1
DD1

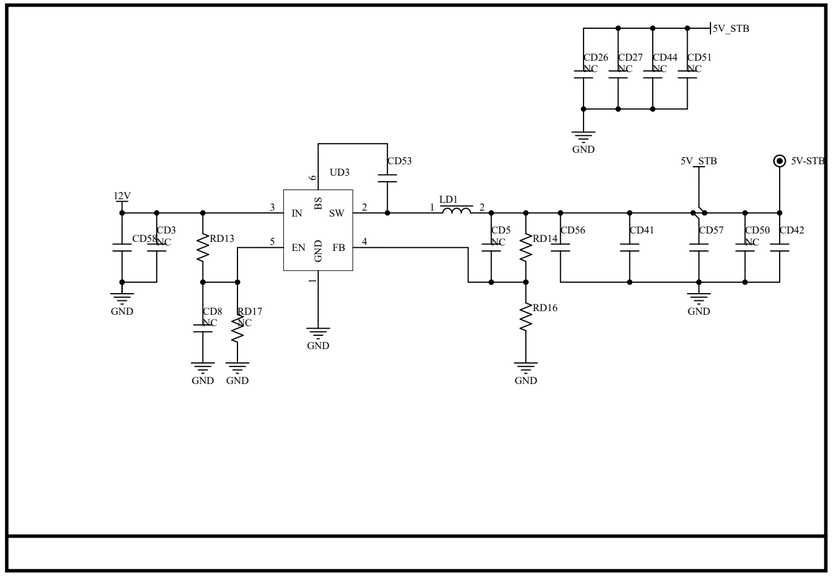
5V_STB
CD26
CD27
CD44
CD51
GND
UD3
CD53
12V
CD5
CD3
RD13
IN
EN
BS
SW
FB
LD1
CD5
RD14
CD56
CD41
CD57
CD50
CD42
5V-STB
RD16
CD8
RD17

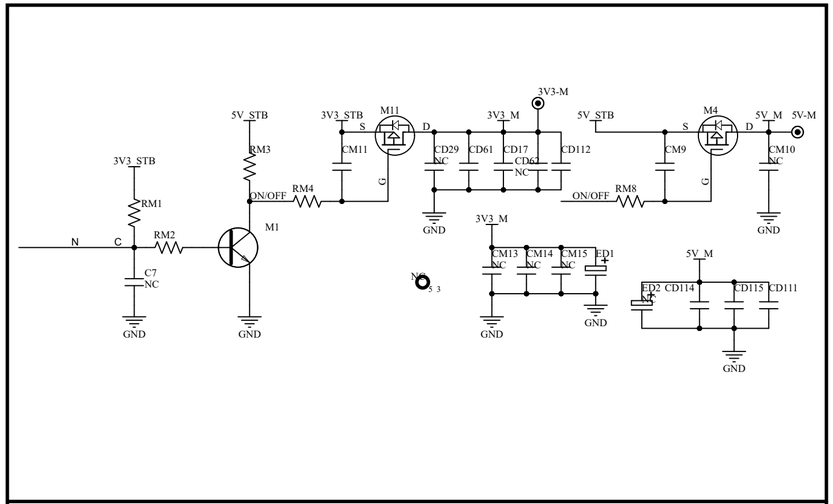
3V3-M
5V_STB
3V3_STB
M11
3V3_M
M4
5V_M
5V-M
RM3
CM11
CD29
CD61
CD17
CD63
CD112
CM9
CM10
3V3_STB
RM1
RM4
ON/OFF
RM8
N
C
RM2
M1
C7
CM13
CM14
CM15
ED1
ED2
CD114
CD115
CD111

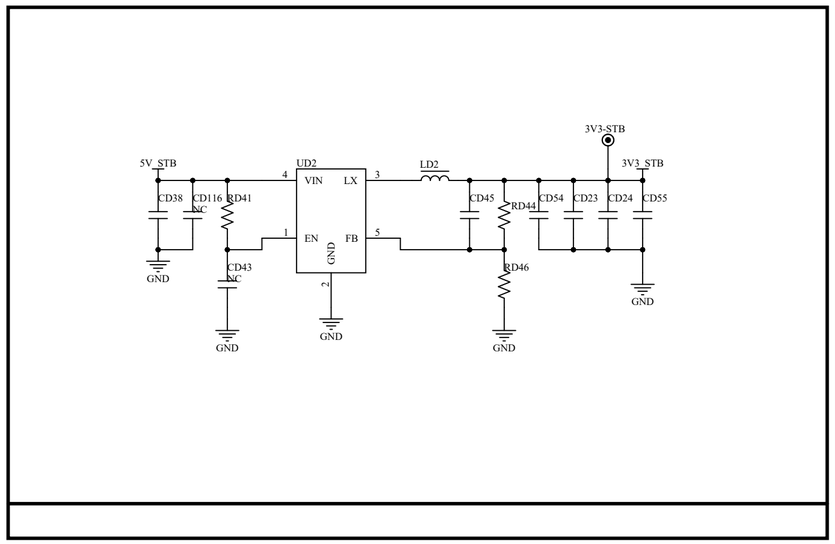
3V3-STB
5V_STB
UD2
VIN
LX
EN
FB
GND
LD2
3V3_STB
CD38
CD116
RD41
CD43
CD45
RD44
CD54
CD23
CD24
CD55
RD46

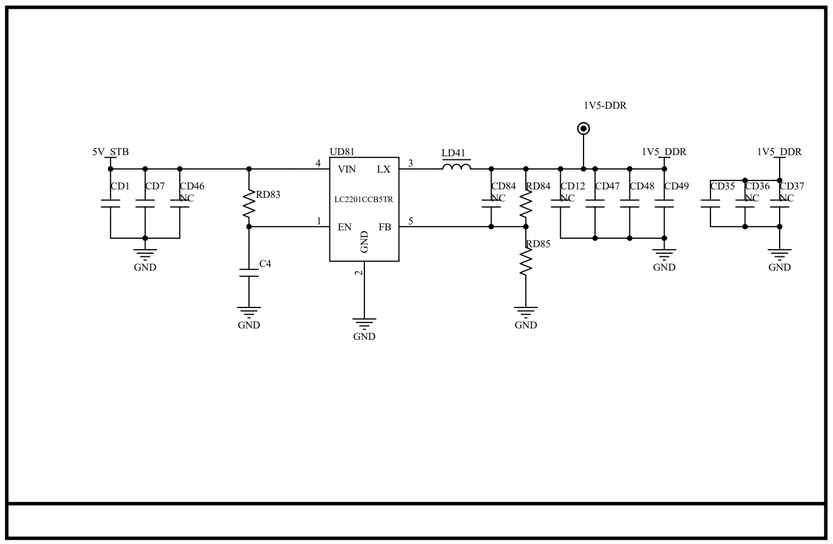
1V5-DDR
5V_STB
UD81
VIN
LX
LC2201CCB5TR
EN
FB
GND
LD41
1V5_DDR
CD1
CD7
CD46
RD83
C4
CD84
RD84
CD12
CD47
CD48
CD49
CD35
CD36
CD37
RD85

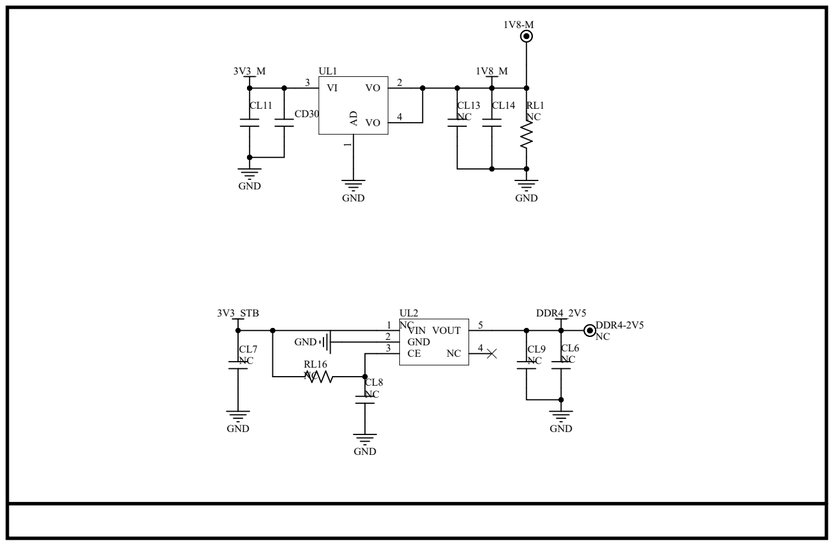
1V8-M
3V3_M
UL1
VI
VO
AD
1V8_M
CL11
CD30
CL13
CL14
RL1
3V3_STB
UL2
VIN
VOUT
GND
CE
NC
DDR4_2V5
DDR4-2V5
CL7
RL16
CL8
CL9
CL6

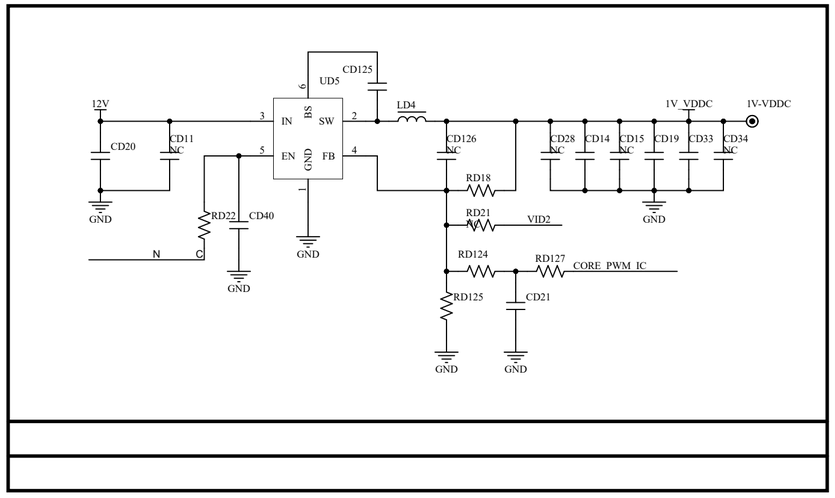
12V
UD5
CD125
IN
SW
EN
FB
GND
LD4
1V_VDDC
1V-VDDC
CD20
CD11
CD126
CD28
CD14
CD15
CD19
CD33
CD34
RD18
RD22
CD40
RD21
VID2
N
C
RD124
RD127
CORE_PWM_IC
RD125
CD21

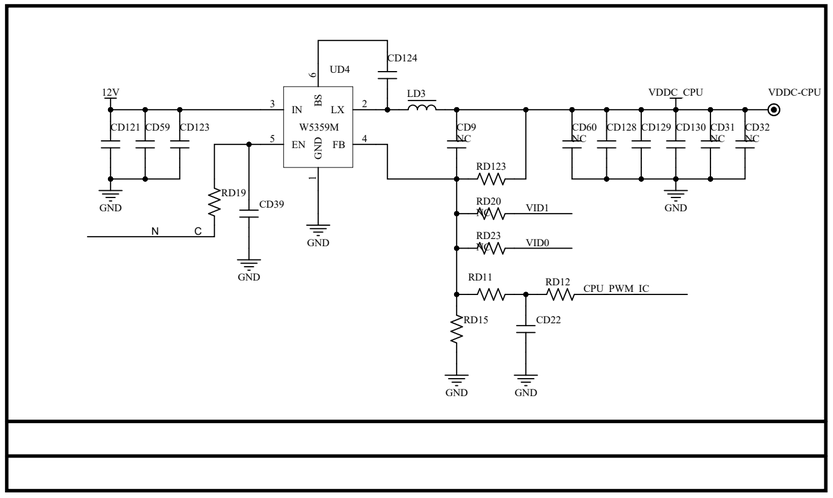
CD124
UD4
12V
IN
LX
W5359M
EN
FB
GND
LD3
VDDC_CPU
VDDC-CPU
CD121
CD59
CD123
CD9
CD60
CD128
CD129
CD130
CD31
CD32
RD123
RD19
CD39
RD20
VID1
RD23
VID0
N
C
RD11
RD12
CPU_PWM_IC
RD15
CD22

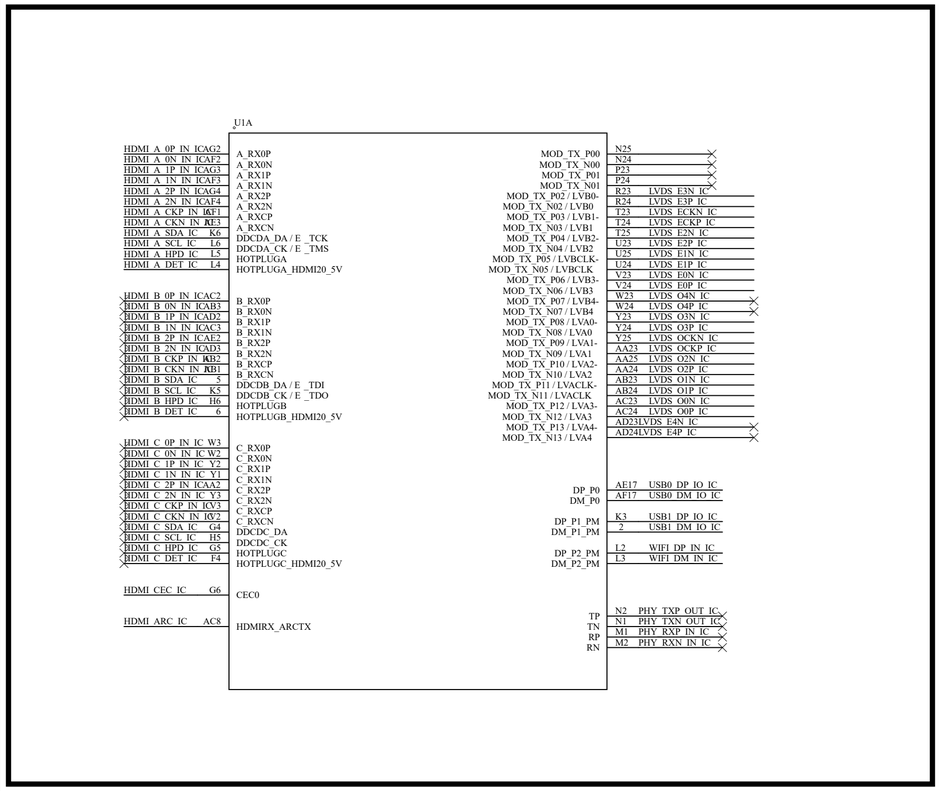
U1A
HDMI_A_0P_IN_IC AG2 A_RX0P
HDMI_A_0N_IN_IC AF2 A_RX0N
HDMI_A_1P_IN_IC AG3 A_RX1P
HDMI_A_1N_IN_IC AF3 A_RX1N
HDMI_A_2P_IN_IC AG4 A_RX2P
HDMI_A_2N_IN_IC AF4 A_RX2N
HDMI_A_CKP_IN_IC AG1 A_RXCP
HDMI_A_CKN_IN_IC AF1 A_RXCN
HDMI_A_SDA_IC K6 DDCDA_DA / E_TCK
HDMI_A_SCL_IC L6 DDCDA_CK / E_TMS
HDMI_A_HPD_IC L5 HOTPLUGA
HDMI_A_DET_IC L4 HOTPLUGA_HDMI20_5V
HDMI_B_0P_IN_IC AC2 B_RX0P
HDMI_B_0N_IN_IC AB3 B_RX0N
HDMI_B_1P_IN_IC AD2 B_RX1P
HDMI_B_1N_IN_IC AC3 B_RX1N
HDMI_B_2P_IN_IC AE2 B_RX2P
HDMI_B_2N_IN_IC AD3 B_RX2N
HDMI_B_CKP_IN_IC AB2 B_RXCP
HDMI_B_CKN_IN_IC AB1 B_RXCN
HDMI_B_SDA_IC 5 DDCDB_DA / E_TDI
HDMI_B_SCL_IC K5 DDCDB_CK / E_TDO
HDMI_B_HPD_IC H6 HOTPLUGB
HDMI_B_DET_IC 6 HOTPLUGB_HDMI20_5V
HDMI_C_0P_IN_IC W3 C_RX0P
HDMI_C_0N_IN_IC W2 C_RX0N
HDMI_C_1P_IN_IC Y2 C_RX1P
HDMI_C_1N_IN_IC Y1 C_RX1N
HDMI_C_2P_IN_IC AA2 C_RX2P
HDMI_C_2N_IN_IC Y3 C_RX2N
HDMI_C_CKP_IN_IC V3 C_RXCP
HDMI_C_CKN_IN_IC V2 C_RXCN
HDMI_C_SDA_IC G4 DDCDC_DA
HDMI_C_SCL_IC H5 DDCDC_CK
HDMI_C_HPD_IC G5 HOTPLUGC
HDMI_C_DET_IC F4 HOTPLUGC_HDMI20_5V
HDMI_CEC_IC G6 CEC0
HDMI_ARC_IC AC8 HDMIRX_ARCTX
MOD_TX_P00 N25
MOD_TX_N00 N24
MOD_TX_P01 P23
MOD_TX_N01 P24
MOD_TX_P02 / LVB0- R23 LVDS_E3N_IC
MOD_TX_N02 / LVB0 R24 LVDS_E3P_IC
MOD_TX_P03 / LVB1- T23 LVDS_ECKN_IC
MOD_TX_N03 / LVB1 T24 LVDS_ECKP_IC
MOD_TX_P04 / LVB2- T25 LVDS_E2N_IC
MOD_TX_N04 / LVB2 U23 LVDS_E2P_IC
MOD_TX_P05 / LVBCLK- U25 LVDS_E1N_IC
MOD_TX_N05 / LVBCLK U24 LVDS_E1P_IC
MOD_TX_P06 / LVB3- V23 LVDS_E0N_IC
MOD_TX_N06 / LVB3 V24 LVDS_E0P_IC
MOD_TX_P07 / LVB4- W23 LVDS_O4N_IC
MOD_TX_N07 / LVB4 W24 LVDS_O4P_IC
MOD_TX_P08 / LVA0- Y23 LVDS_O3N_IC
MOD_TX_N08 / LVA0 Y24 LVDS_O3P_IC
MOD_TX_P09 / LVA1- Y25 LVDS_OCKN_IC
MOD_TX_N09 / LVA1 AA23 LVDS_OCKP_IC
MOD_TX_P10 / LVA2- AA25 LVDS_O2N_IC
MOD_TX_N10 / LVA2 AA24 LVDS_O2P_IC
MOD_TX_P11 / LVACLK- AB23 LVDS_O1N_IC
MOD_TX_N11 / LVACLK AB24 LVDS_O1P_IC
MOD_TX_P12 / LVA3- AC23 LVDS_O0N_IC
MOD_TX_N12 / LVA3 AC24 LVDS_O0P_IC
MOD_TX_P13 / LVA4- AD23 LVDS_E4N_IC
MOD_TX_N13 / LVA4 AD24 LVDS_E4P_IC
DP_P0 AE17 USB0_DP_IO_IC
DM_P0 AF17 USB0_DM_IO_IC
DP_P1_PM K3 USB1_DP_IO_IC
DM_P1_PM 2 USB1_DM_IO_IC
DP_P2_PM L2 WIFI_DP_IN_IC
DM_P2_PM L3 WIFI_DM_IN_IC
TP N2 PHY_TXP_OUT_IC
TN N1 PHY_TXN_OUT_IC
RP M1 PHY_RXP_IN_IC
RN M2 PHY_RXN_IN_IC

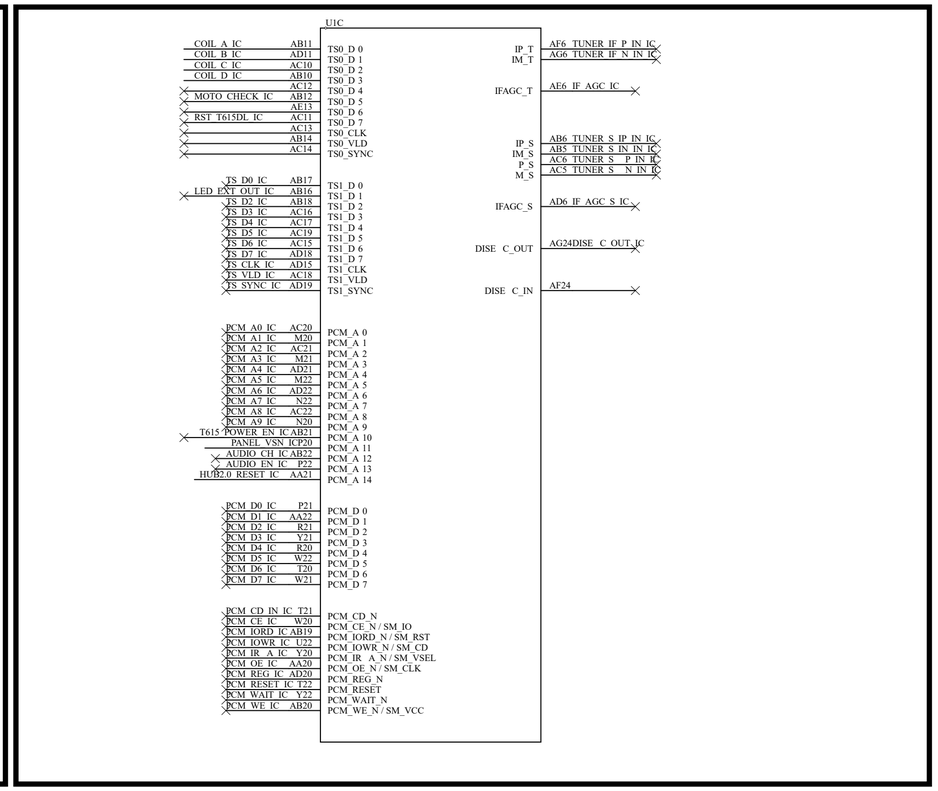
U1C
COIL_A_IC AB11 TS0_D0
COIL_B_IC AD11 TS0_D1
COIL_C_IC AC10 TS0_D2
COIL_D_IC AB10 TS0_D3
AC12 TS0_D4
MOTO_CHECK_IC AB12 TS0_D5
AE13 TS0_D6
RST_T615DL_IC AC11 TS0_D7
AC13 TS0_CLK
AB14 TS0_VLD
AC14 TS0_SYNC
TS_D0_IC AB17 TS1_D0
LED_PWT_OUT_IC AB16 TS1_D1
TS_D2_IC AB18 TS1_D2
TS_D3_IC AC16 TS1_D3
TS_D4_IC AC17 TS1_D4
TS_D5_IC AC19 TS1_D5
TS_D6_IC AC15 TS1_D6
TS_D7_IC AD18 TS1_D7
TS_CLK_IC AD15 TS1_CLK
TS_VLD_IC AC18 TS1_VLD
TS_SYNC_IC AD19 TS1_SYNC
PCM_A0_IC AC20 PCM_A0
PCM_A1_IC M20 PCM_A1
PCM_A2_IC AC21 PCM_A2
PCM_A3_IC M21 PCM_A3
PCM_A4_IC AD21 PCM_A4
PCM_A5_IC M22 PCM_A5
PCM_A6_IC AD22 PCM_A6
PCM_A7_IC N22 PCM_A7
PCM_A8_IC AC22 PCM_A8
PCM_A9_IC N20 PCM_A9
T615_POWER_EN_IC AB21 PCM_A10
PANEL_VSN_IC P20 PCM_A11
AUDIO_CH_IC AB22 PCM_A12
AUDIO_EN_IC P22 PCM_A13
HUB2.0_RESET_IC AA21 PCM_A14
PCM_D0_IC P21 PCM_D0
PCM_D1_IC AA22 PCM_D1
PCM_D2_IC R21 PCM_D2
PCM_D3_IC Y21 PCM_D3
PCM_D4_IC R20 PCM_D4
PCM_D5_IC W22 PCM_D5
PCM_D6_IC T20 PCM_D6
PCM_D7_IC W21 PCM_D7
PCM_CD_IN_IC T21 PCM_CD_N
PCM_CE_IC W20 PCM_CE_N / SM_IO
PCM_IORD_IC AB19 PCM_IORD_N / SM_RST
PCM_IOWR_IC U22 PCM_IOWR_N / SM_CD
PCM_IR_A_IC Y20 PCM_IR_A_N / SM_VSEL
PCM_OE_IC AA20 PCM_OE_N / SM_CLK
PCM_REG_IC AD20 PCM_REG_N
PCM_RESET_IC T22 PCM_RESET
PCM_WAIT_IC Y22 PCM_WAIT_N
PCM_WE_IC AB20 PCM_WE_N / SM_VCC
IP_T AF6 TUNER_IF_P_IN_IC
IM_T AG6 TUNER_IF_N_IN_IC
IFAGC_T AE6 IF_AGC_IC
IP_S AB6 TUNER_S_IP_IN_IC
IM_S AB5 TUNER_S_IN_IN_IC
P_S AC6 TUNER_S_P_IN_IC
M_S AC5 TUNER_S_N_IN_IC
IFAGC_S AD6 IF_AGC_S_IC
DISE_C_OUT AG24 DISE_C_OUT_IC
DISE_C_IN AF24

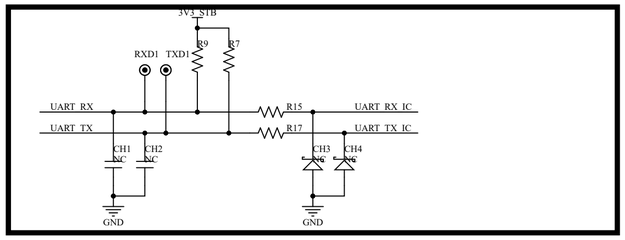
3V3_STB
RXD1
TXD1
R9
R7
UART_RX
UART_TX
R15
R17
UART_RX_IC
UART_TX_IC
CH1 NC
CH2 NC
CH3 NC
CH4 NC
GND
GND

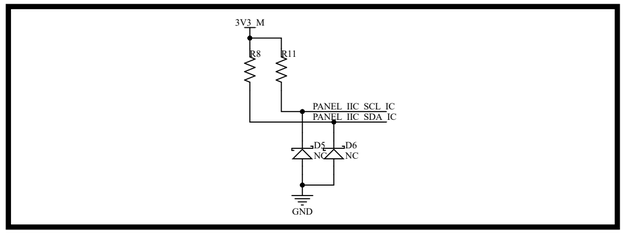
3V3_M
R8
R11
PANEL_IIC_SCL_IC
PANEL_IIC_SDA_IC
D5 NC
D6 NC
GND

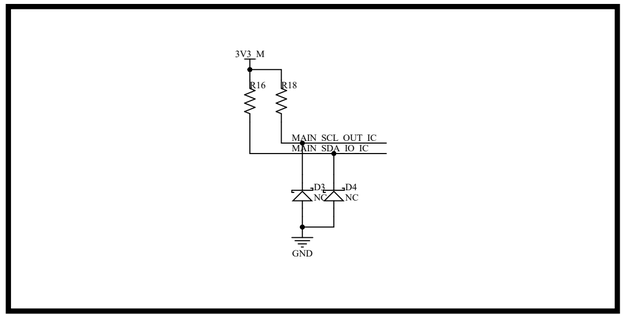
3V3_M
R16
R18
MAIN_SCL_OUT_IC
MAIN_SDA_IO_IC
D3 NC
D4 NC
GND

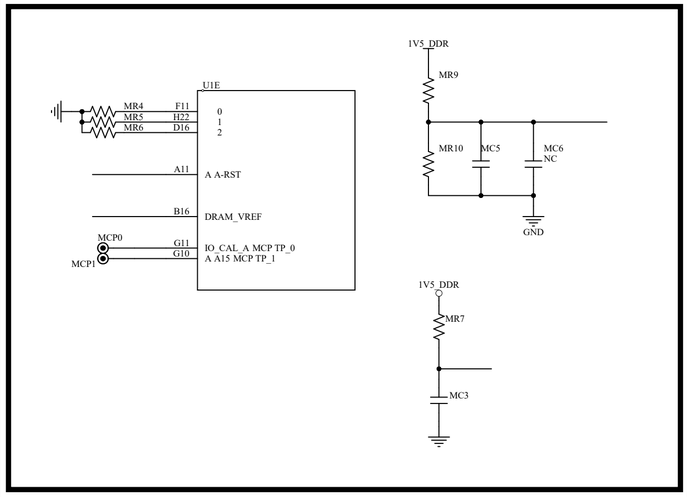
U1E
MR4 F11
MR5 H22
MR6 D16
0
1
2
A11 A_A-RST
B16 DRAM_VREF
MCP0 G11
MCP1 G10
IO_CAL_A_MCP_TP_0
A_A15_MCP_TP_1
1V5_DDR
MR9
MR10
MC5
MC6 NC
GND
1V5_DDR
MR7
MC3

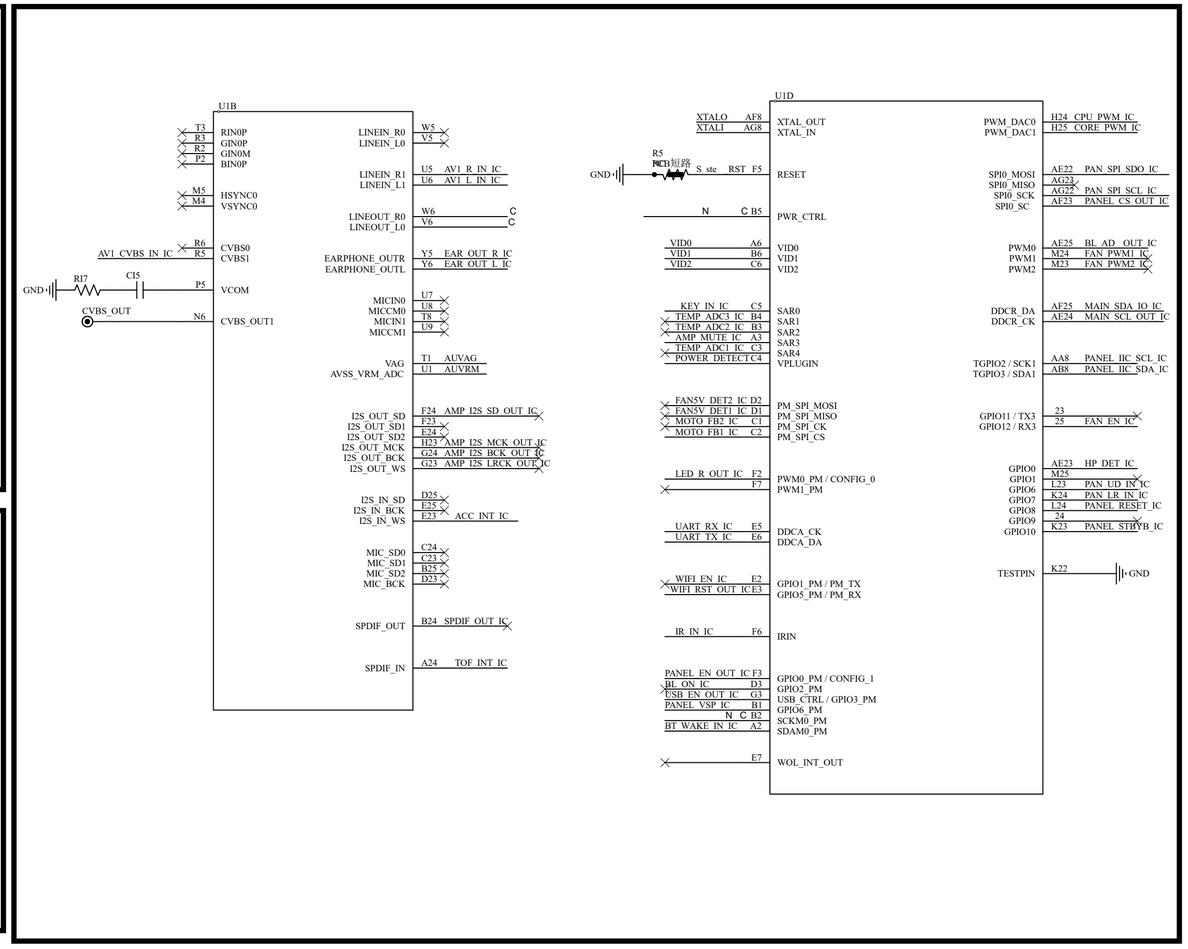
U1B
T3 RIN0P
R3 GIN0P
R2 GIN0M
P2 BIN0P
M5 HSYNC0
M4 VSYNC0
AV1_CVBS_IN_IC R6 CVBS0
R5 CVBS1
GND
R17
C15
P5 VCOM
CVBS_OUT N6 CVBS_OUT1
LINEIN_R0 W5
LINEIN_L0 V5
LINEIN_R1 U5 AV1_R_IN_IC
LINEIN_L1 U6 AV1_L_IN_IC
LINEOUT_R0 W6 C
LINEOUT_L0 V6 C
EARPHONE_OUTR Y5 EAR_OUT_R_IC
EARPHONE_OUTL Y6 EAR_OUT_L_IC
MICIN0 U7
MICCM0 U8
MICIN1 T8
MICCM1 U9
VAG T1 AUVAG
AVSS_VRM_ADC U1 AUVRM
I2S_OUT_SD F24 AMP_I2S_SD_OUT_IC
I2S_OUT_SD1 F23
I2S_OUT_SD2 E24
I2S_OUT_MCK H23 AMP_I2S_MCK_OUT_IC
I2S_OUT_BCK G24 AMP_I2S_BCK_OUT_IC
I2S_OUT_WS G23 AMP_I2S_LRCK_OUT_IC
I2S_IN_SD D25
I2S_IN_BCK E25
I2S_IN_WS E23 ACC_INT_IC
MIC_SD0 C24
MIC_SD1 C23
MIC_SD2 B25
MIC_BCK D23
SPDIF_OUT B24 SPDIF_OUT_IC
SPDIF_IN A24 TOF_INT_IC
U1D
XTALO AF8 XTAL_OUT
XTALI AG8 XTAL_IN
R5
R03 短路
GND
S_ste RST F5 RESET
N C B5 PWR_CTRL
VID0 A6 VID0
VID1 B6 VID1
VID2 C6 VID2
KEY_IN_IC C5 SAR0
TEMP_ADC3_IC B4 SAR1
TEMP_ADC2_IC B3 SAR2
AMP_MUTE_IC A3 SAR3
TEMP_ADC1_IC C3 SAR4
POWER_DETECT C4 VPLUGIN
FAN5V_DET2_IC D2 PM_SPI_MOSI
FAN5V_DET1_IC D1 PM_SPI_MISO
MOTO_FB2_IC C1 PM_SPI_CK
MOTO_FB1_IC C2 PM_SPI_CS
LED_R_OUT_IC F2 PWM0_PM / CONFIG_0
F7 PWM1_PM
UART_RX_IC E5 DDCA_CK
UART_TX_IC E6 DDCA_DA
WIFI_EN_IC E2 GPIO1_PM / PM_TX
WIFI_RST_OUT_IC E3 GPIO5_PM / PM_RX
IR_IN_IC F6 IRIN
PANEL_EN_OUT_IC F3 GPIO0_PM / CONFIG_1
BL_ON_IC D3 GPIO2_PM
USB_EN_OUT_IC G3 USB_CTRL / GPIO3_PM
PANEL_VSP_IC B1 GPIG6_PM
N C B2 SCKM0_PM
BT_WAKE_IN_IC A2 SDAM0_PM
E7 WOL_INT_OUT
PWM_DAC0 H24 CPU_PWM_IC
PWM_DAC1 H25 CORE_PWM_IC
SPI0_MOSI AE22 PAN_SPI_SDO_IC
SPI0_MISO AG22
SPI0_SCK AG22 PAN_SPI_SCL_IC
SPI0_SC AF23 PANEL_CS_OUT_IC
PWM0 AE25 BL_AD_OUT_IC
PWM1 M24 FAN_PWM1_IC
PWM2 M23 FAN_PWM2_IC
DDCR_DA AF25 MAIN_SDA_IO_IC
DDCR_CK AE24 MAIN_SCL_OUT_IC
TGPIO2 / SCK1 AA8 PANEL_IIC_SCL_IC
TGPIO3 / SDA1 AB8 PANEL_IIC_SDA_IC
GPIO11 / TX3 23
GPIO12 / RX3 25 FAN_EN_IC
GPIO0 AE23 HP_DET_IC
GPIO1 M25
GPIO6 L23 PAN_UD_IN_IC
GPIO7 K24 PAN_LR_IN_IC
GPIO8 L24 PANEL_RESET_IC
GPIO9 24
GPIO10 K23 PANEL_STBYB_IC
TESTPIN K22 GND

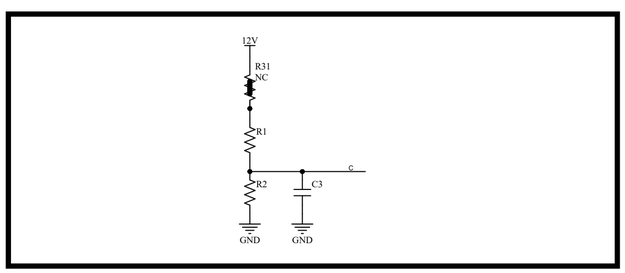
12V
R31
NC
R1
c
R2
C3
GND
GND

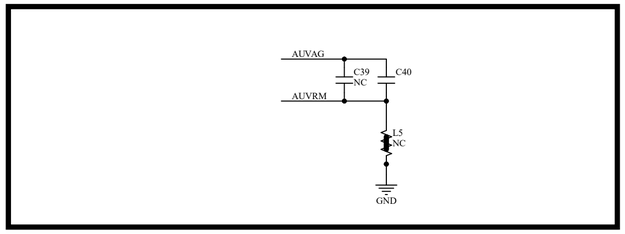
AUVAG
C39
NC
C40
AUVRM
L5
NC
GND

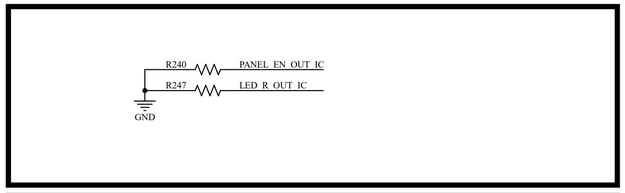
R240
PANEL_EN_OUT_IC
R247
LED_R_OUT_IC
GND

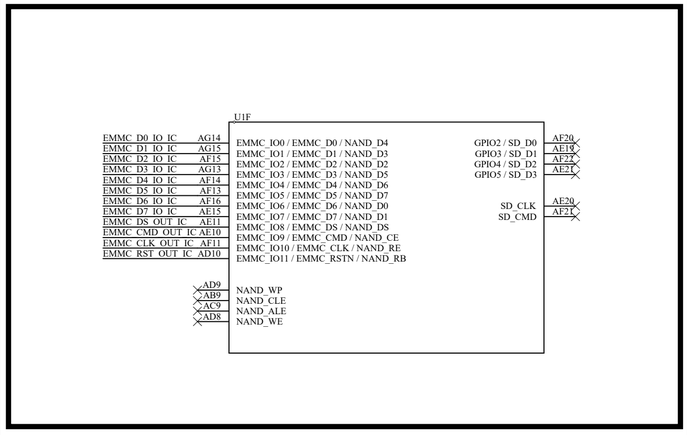
U1F
EMMC_D0_IO_IC AG14
EMMC_D1_IO_IC AG15
EMMC_D2_IO_IC AF15
EMMC_D3_IO_IC AG13
EMMC_D4_IO_IC AF14
EMMC_D5_IO_IC AF13
EMMC_D6_IO_IC AF16
EMMC_D7_IO_IC AE15
EMMC_DS_OUT_IC AE11
EMMC_CMD_OUT_IC AE10
EMMC_CLK_OUT_IC AF11
EMMC_RST_OUT_IC AD10
EMMC_IO0 / EMMC_D0 / NAND_D4
EMMC_IO1 / EMMC_D1 / NAND_D3
EMMC_IO2 / EMMC_D2 / NAND_D2
EMMC_IO3 / EMMC_D3 / NAND_D5
EMMC_IO4 / EMMC_D4 / NAND_D6
EMMC_IO5 / EMMC_D5 / NAND_D7
EMMC_IO6 / EMMC_D6 / NAND_D0
EMMC_IO7 / EMMC_D7 / NAND_D1
EMMC_IO8 / EMMC_DS / NAND_DS
EMMC_IO9 / EMMC_CMD / NAND_CE
EMMC_IO10 / EMMC_CLK / NAND_RE
EMMC_IO11 / EMMC_RSTN / NAND_RB
GPIO2 / SD_D0 AF20
GPIO3 / SD_D1 AE19
GPIO4 / SD_D2 AF22
GPIO5 / SD_D3 AE21
SD_CLK AE20
SD_CMD AF21
AD9 NAND_WP
AB9 NAND_CLE
AC9 NAND_ALE
AD8 NAND_WE

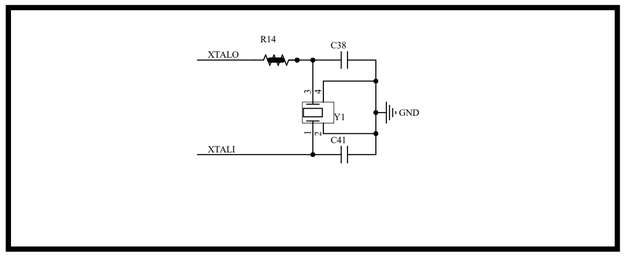
R14
C38
XTALO
Y1
GND
C41
XTALI

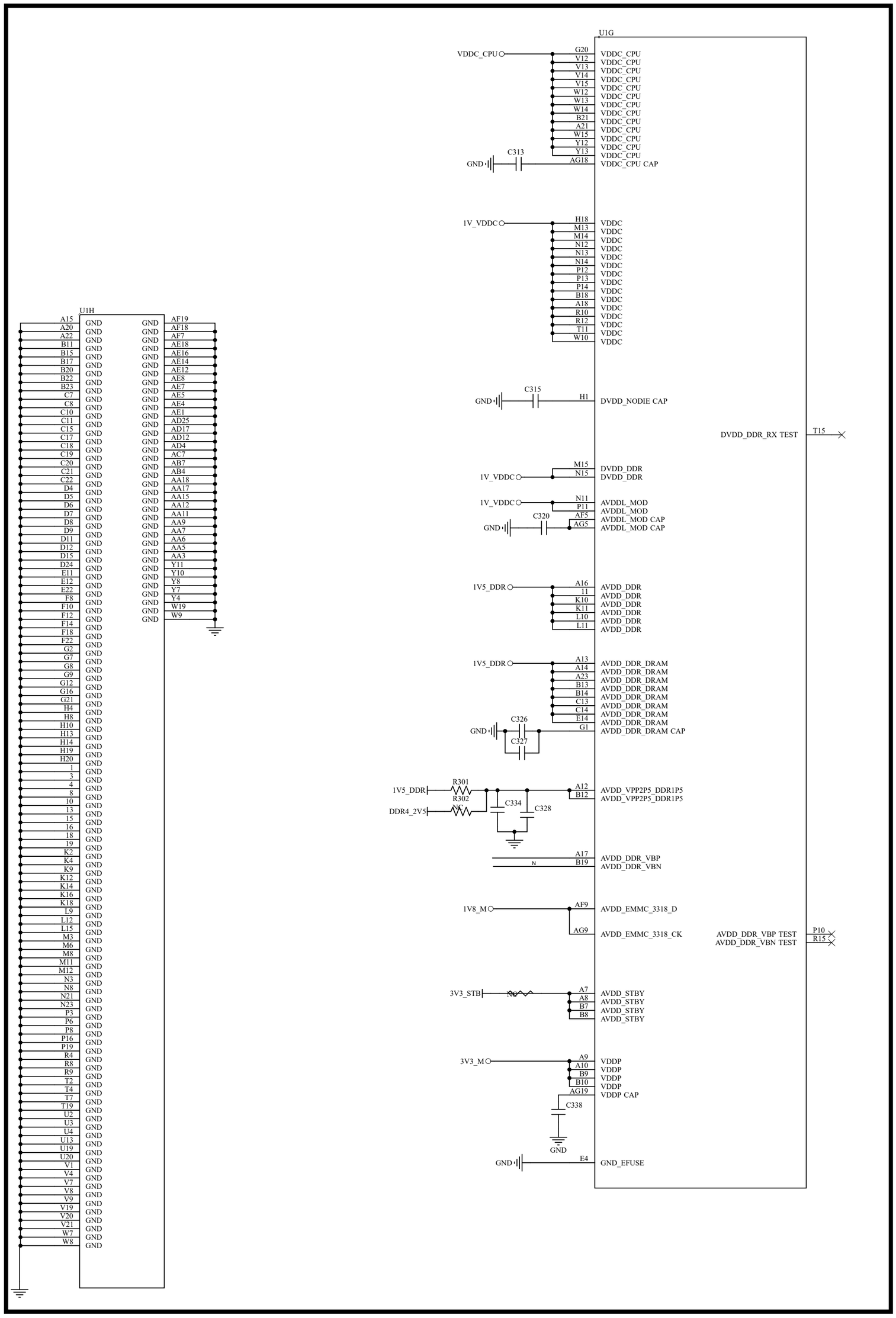
U1G
VDDC_CPU
G20 V12 V13 V14 V15 W12 W13 W14 B21 A21 W15 Y12 Y13 AG18
VDDC_CPU CAP
C313
GND
1V_VDDC
H18 M13 M14 N12 N13 N14 P12 P13 P14 B18 A18 R10 R12 T11 W10
VDDC
C315
H1
DVDD_NODIE CAP
DVDD_DDR_RX TEST
T15
M15 N15
DVDD_DDR
N11 P11
AVDDL_MOD
C320
AF5 AG5
AVDDL_MOD CAP
1V5_DDR
A16 11 K10 K11 L10 L11
AVDD_DDR
A13 A14 A23 B13 B14 C13 C14 E14 G1
AVDD_DDR_DRAM
C326
C327
AVDD_DDR_DRAM CAP
R301
R302
NC
DDR4_2V5
C334
C328
A12 B12
AVDD_VPP2P5_DDR1P5
A17 B19
AVDD_DDR_VBP
AVDD_DDR_VBN
1V8_M
AF9
AVDD_EMMC_3318_D
AG9
AVDD_EMMC_3318_CK
AVDD_DDR_VBP TEST
AVDD_DDR_VBN TEST
P10
R15
3V3_STB
A7 A8 B7 B8
AVDD_STBY
3V3_M
A9 A10 B9 B10 AG19
VDDP
VDDP CAP
C338
E4
GND_EFUSE
U1H
A15 A20 A22 B11 B15 B17 B20 B22 B23 C7 C8 C10 C11 C15 C17 C18 C19 C20 C21 C22 D4 D5 D6 D7 D8 D9 D11 D12 D15 D24 E11 E12 E22 F8 F10 F12 F14 F18 F22 G2 G7 G8 G9 G12 G16 G21 H4 H8 H10 H13 H14 H19 H20 1 3 4 8 10 13 15 16 18 19 K2 K4 K9 K12 K14 K16 K18 L9 L12 L15 M3 M6 M8 M11 M12 N3 N8 N21 N23 P3 P6 P8 P16 P19 R4 R8 R9 T2 T4 T7 T19 U2 U3 U4 U13 U19 U20 V1 V4 V7 V8 V9 V19 V20 V21 W7 W8
GND
AF19 AF18 AF7 AE18 AE16 AE14 AE12 AE8 AE7 AE5 AE4 AE1 AD25 AD17 AD12 AD4 AC7 AB7 AB4 AA18 AA17 AA15 AA12 AA11 AA9 AA7 AA6 AA5 AA3 Y11 Y10 Y8 Y7 Y4 W19 W9

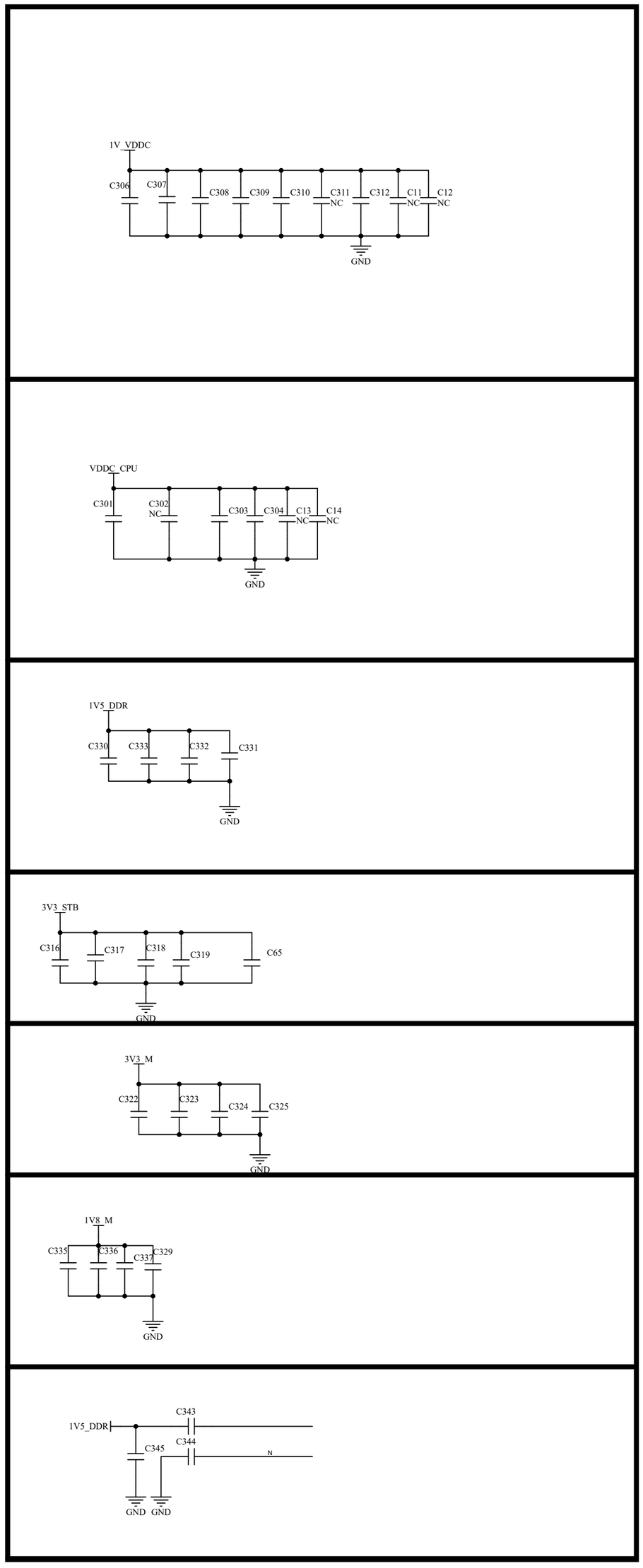
1V_VDDC
C306 C307 C308 C309 C310 C311 C312 C11 C12
NC
GND
VDDC_CPU
C301 C302 C303 C304 C13 C14
NC
GND
1V5_DDR
C330 C333 C332 C331
GND
3V3_STB
C316 C317 C318 C319 C65
GND
3V3_M
C322 C323 C324 C325
GND
1V8_M
C335 C336 C337 C329
GND
1V5_DDR
C343 C344 C345
N
GND GND

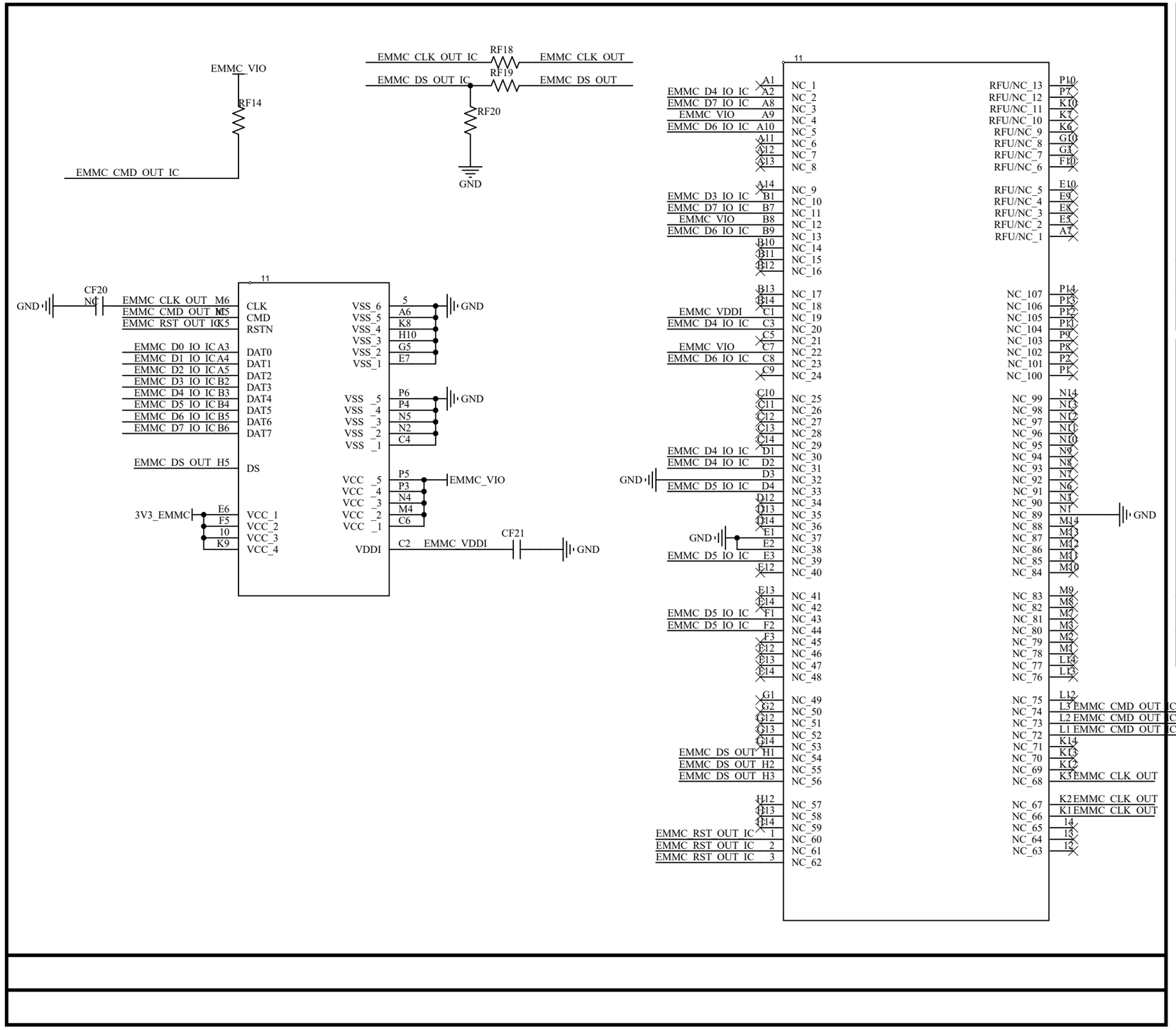
EMMC_VIO
RF14
EMMC_CMD_OUT_IC
EMMC_CLK_OUT_IC
RF18
EMMC_CLK_OUT
EMMC_DS_OUT_IC
RF19
EMMC_DS_OUT
RF20
GND
CF20
NC
EMMC_CLK_OUT M6
EMMC_CMD_OUT M5
EMMC_RST_OUT K5
EMMC_D0_IO_IC A3
EMMC_D1_IO_IC A4
EMMC_D2_IO_IC A5
EMMC_D3_IO_IC B2
EMMC_D4_IO_IC B3
EMMC_D5_IO_IC B4
EMMC_D6_IO_IC B5
EMMC_D7_IO_IC B6
EMMC_DS_OUT H5
3V3_EMMC
CLK
CMD
RSTN
DAT0
DAT1
DAT2
DAT3
DAT4
DAT5
DAT6
DAT7
DS
VCC_1
VCC_2
VCC_3
VCC_4
VDDI
VSS_6
VSS_5
VSS_4
VSS_3
VSS_2
VSS_1
VCC_5
VCC_4
VCC_3
VCC_2
VCC_1
EMMC_VDDI
CF21
EMMC_VIO
EMMC_D4_IO_IC
EMMC_D7_IO_IC
EMMC_D6_IO_IC
EMMC_D3_IO_IC
EMMC_D5_IO_IC
EMMC_RST_OUT_IC
NC_1
NC_2
NC_3
NC_4
NC_5
NC_6
NC_7
NC_8
NC_9
NC_10
NC_11
NC_12
NC_13
NC_14
NC_15
NC_16
NC_17
NC_18
NC_19
NC_20
NC_21
NC_22
NC_23
NC_24
NC_25
NC_26
NC_27
NC_28
NC_29
NC_30
NC_31
NC_32
NC_33
NC_34
NC_35
NC_36
NC_37
NC_38
NC_39
NC_40
NC_41
NC_42
NC_43
NC_44
NC_45
NC_46
NC_47
NC_48
NC_49
NC_50
NC_51
NC_52
NC_53
NC_54
NC_55
NC_56
NC_57
NC_58
NC_59
NC_60
NC_61
NC_62
RFU/NC_13
RFU/NC_12
RFU/NC_11
RFU/NC_10
RFU/NC_9
RFU/NC_8
RFU/NC_7
RFU/NC_6
RFU/NC_5
RFU/NC_4
RFU/NC_3
RFU/NC_2
RFU/NC_1
NC_107
NC_106
NC_105
NC_104
NC_103
NC_102
NC_101
NC_100
NC_99
NC_98
NC_97
NC_96
NC_95
NC_94
NC_93
NC_92
NC_91
NC_90
NC_89
NC_88
NC_87
NC_86
NC_85
NC_84
NC_83
NC_82
NC_81
NC_80
NC_79
NC_78
NC_77
NC_76
NC_75
NC_74
NC_73
NC_72
NC_71
NC_70
NC_69
NC_68
NC_67
NC_66
NC_65
NC_64
NC_63
EMMC_CMD_OUT_IC
EMMC_CLK_OUT

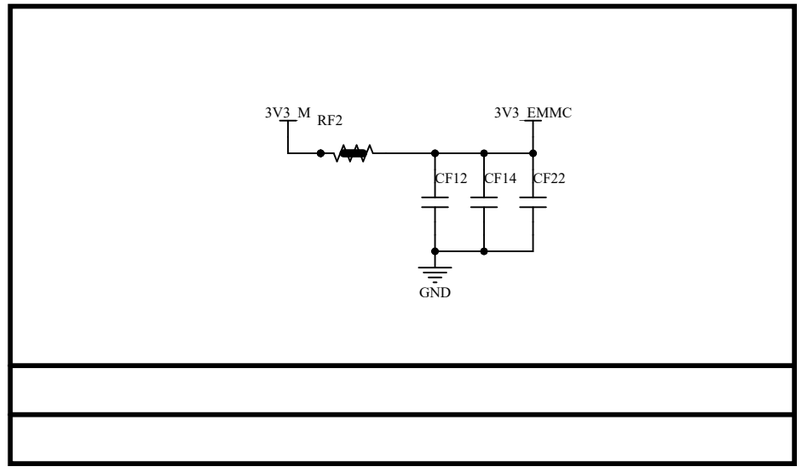
3V3_M
RF2
3V3_EMMC
CF12
CF14
CF22
GND

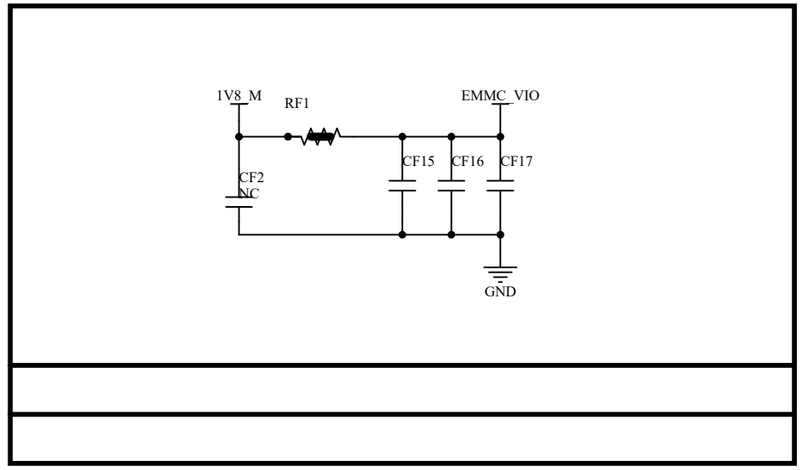
1V8_M
RF1
EMMC_VIO
CF2
NC
CF15
CF16
CF17
GND

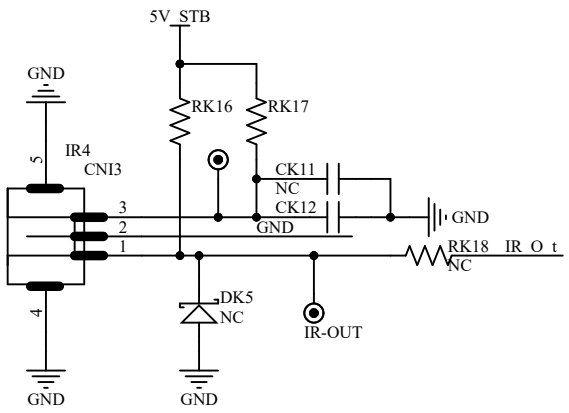
5V_STB
GND
RK16
RK17
IR4
CNI3
CK11
NC
CK12
GND
RK18
IR_O_t
NC
DK5
NC
IR-OUT
GND
GND

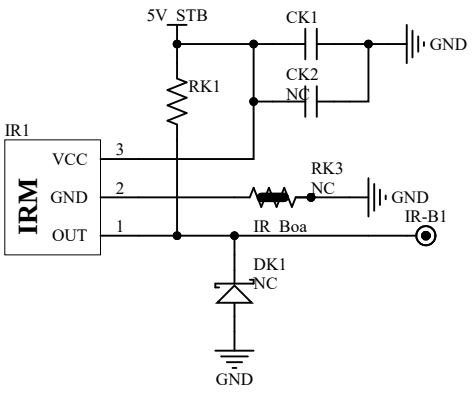
5V_STB
CK1
GND
CK2
NC
RK1
IR1
IRM
VCC
GND
OUT
RK3
NC
IR_Boa
IR-B1
DK1
NC
GND

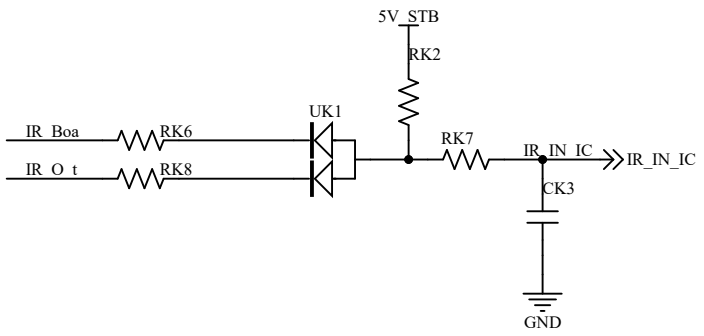
5V_STB
RK2
UK1
IR_Boa
RK6
IR_O_t
RK8
RK7
IR_IN_IC
IR_IN_IC
CK3
GND

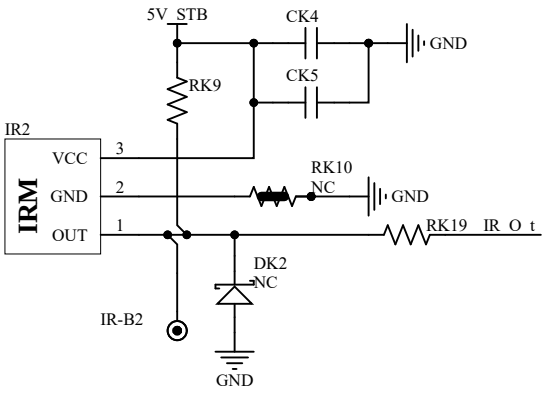
5V_STB
CK4
GND
CK5
RK9
IR2
IRM
VCC
GND
OUT
RK10
NC
RK19
IR_O_t
DK2
NC
IR-B2
GND

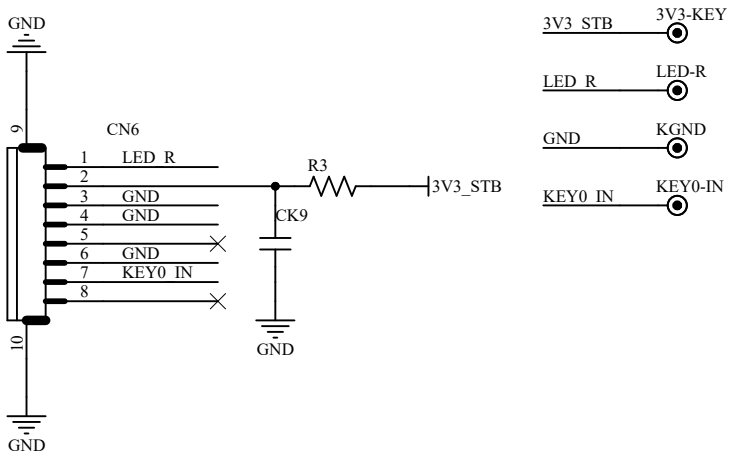
GND
CN6
LED_R
GND
GND
GND
KEY0_IN
R3
3V3_STB
CK9
GND
GND
3V3_STB
3V3-KEY
LED_R
LED-R
GND
KGND
KEY0_IN
KEY0-IN

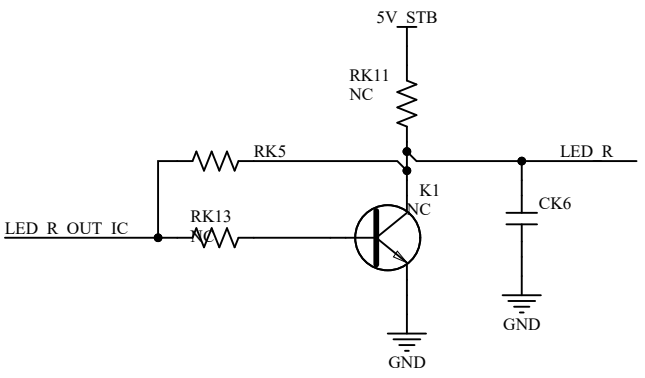
5V_STB
RK11
NC
RK5
LED_R
K1
NC
CK6
LED_R_OUT_IC
RK13
NC
GND
GND

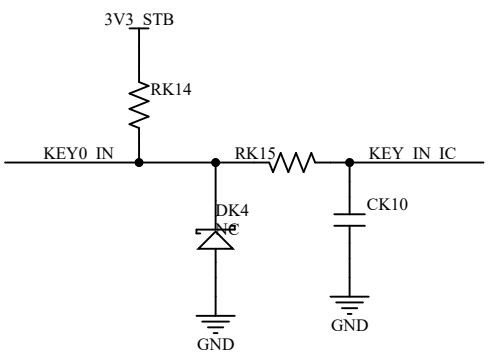
3V3_STB
RK14
KEY0_IN
RK15
KEY_IN_IC
DK4
NC
CK10
GND
GND

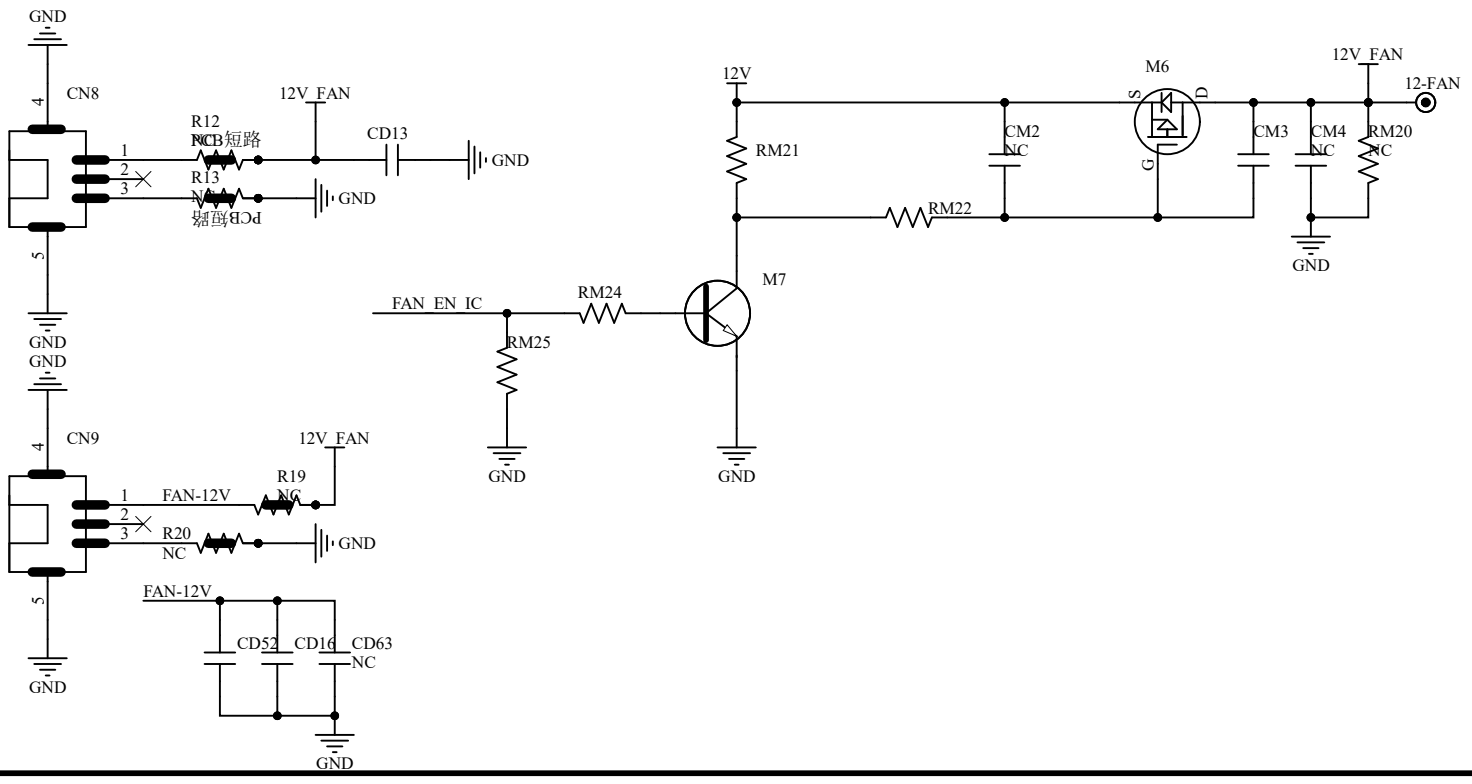
GND
CN8
12V_FAN
R12
NC
短路
CD13
GND
R13
NC
PCB短路
GND
GND
GND
12V
M6
12V_FAN
12-FAN
RM21
CM2
NC
CM3
CM4
NC
RM20
NC
RM22
GND
FAN_EN_IC
RM24
M7
RM25
GND
GND
GND
CN9
12V_FAN
FAN-12V
R19
NC
R20
NC
GND
FAN-12V
CD52
CD16
CD63
NC
GND
GND

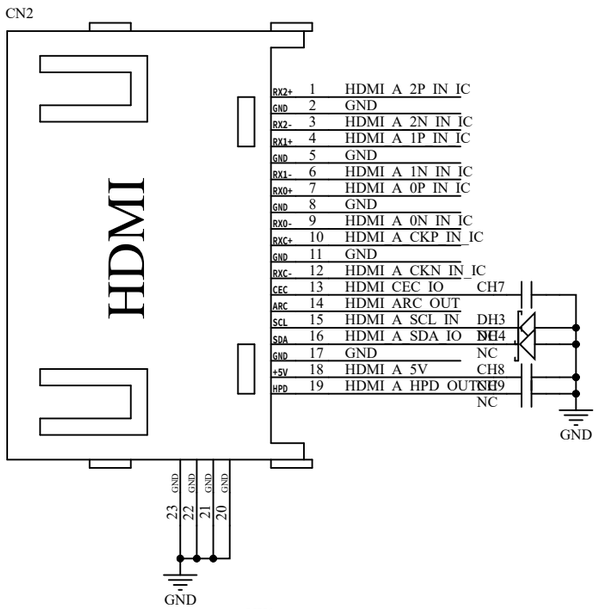
CN2
HDMI
RX2+ 1 HDMI_A_2P_IN_IC
GND 2 GND
RX2- 3 HDMI_A_2N_IN_IC
RX1+ 4 HDMI_A_1P_IN_IC
GND 5 GND
RX1- 6 HDMI_A_1N_IN_IC
RX0+ 7 HDMI_A_0P_IN_IC
GND 8 GND
RX0- 9 HDMI_A_0N_IN_IC
RXC+ 10 HDMI_A_CKP_IN_IC
GND 11 GND
RXC- 12 HDMI_A_CKN_IN_IC
CEC 13 HDMI_CEC_IO CH7
ARC 14 HDMI_ARC_OUT
SCL 15 HDMI_A_SCL_IN DH3 NC
SDA 16 HDMI_A_SDA_IO DH4 NC
GND 17 GND
+5V 18 HDMI_A_5V CH8 NC
HPD 19 HDMI_A_HPD_OUT CH9 NC
GND
23 GND
22 GND
21 GND
20 GND
GND

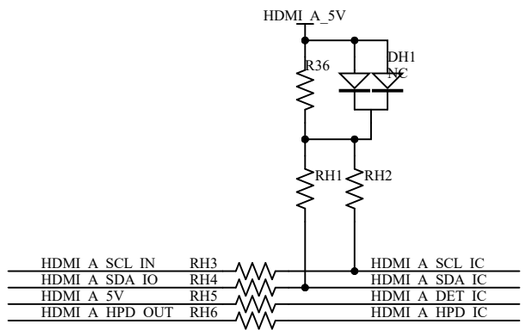
HDMI_A_5V
R36
DH1 NC
RH1
RH2
HDMI_A_SCL_IN RH3 HDMI_A_SCL_IC
HDMI_A_SDA_IO RH4 HDMI_A_SDA_IC
HDMI_A_5V RH5 HDMI_A_DET_IC
HDMI_A_HPD_OUT RH6 HDMI_A_HPD_IC

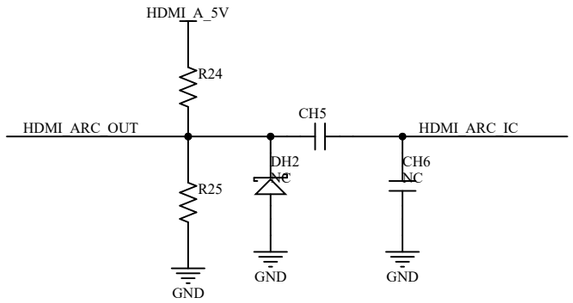
HDMI_A_5V
R24
HDMI_ARC_OUT
CH5
HDMI_ARC_IC
DH2 NC
CH6 NC
R25
GND
GND
GND

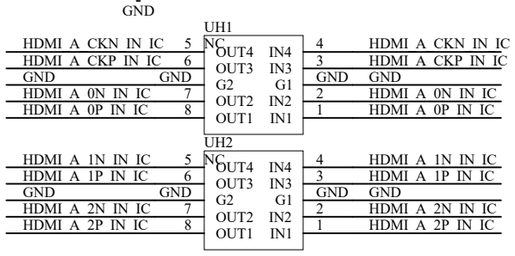
UH1
HDMI_A_CKN_IN_IC 5 NC
HDMI_A_CKP_IN_IC 6
GND GND
HDMI_A_0N_IN_IC 7
HDMI_A_0P_IN_IC 8
OUT4 IN4
OUT3 IN3
G2 G1
OUT2 IN2
OUT1 IN1
4 HDMI_A_CKN_IN_IC
3 HDMI_A_CKP_IN_IC
GND GND
2 HDMI_A_0N_IN_IC
1 HDMI_A_0P_IN_IC
UH2
HDMI_A_1N_IN_IC 5 NC
HDMI_A_1P_IN_IC 6
GND GND
HDMI_A_2N_IN_IC 7
HDMI_A_2P_IN_IC 8
OUT4 IN4
OUT3 IN3
G2 G1
OUT2 IN2
OUT1 IN1
4 HDMI_A_1N_IN_IC
3 HDMI_A_1P_IN_IC
GND GND
2 HDMI_A_2N_IN_IC
1 HDMI_A_2P_IN_IC

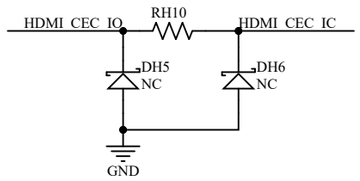
HDMI_CEC_IO
RH10
HDMI_CEC_IC
DH5 NC
DH6 NC
GND

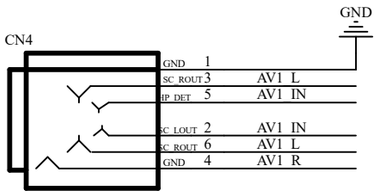
CN4
GND
GND 1
SC_ROUT 3 AV1_L
IP_DET 5 AV1_IN
SC_LOUT 2 AV1_IN
SC_ROUT 6 AV1_L
GND 4 AV1_R

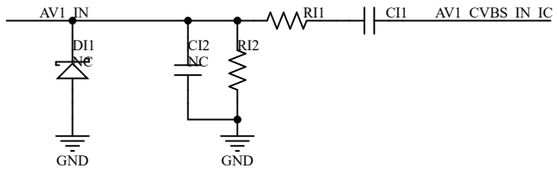
AV1_IN
DI1 NC
CI2 NC
RI2
RI1
CI1
AV1_CVBS_IN_IC
GND
GND

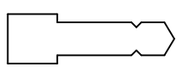

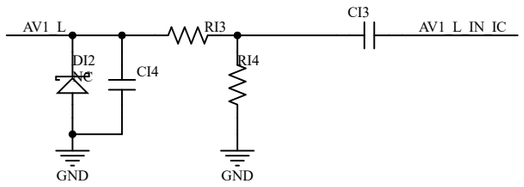
AV1_L
DI2 NC
CI4
RI3
RI4
CI3
AV1_L_IN_IC
GND
GND

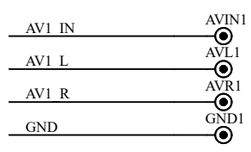
AV1_IN AVIN1
AV1_L AVL1
AV1_R AVR1
GND GND1

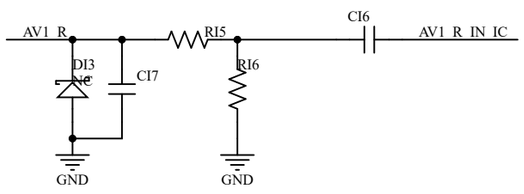
AV1_R
DI3 NC
CI7
RI5
RI6
CI6
AV1_R_IN_IC
GND
GND

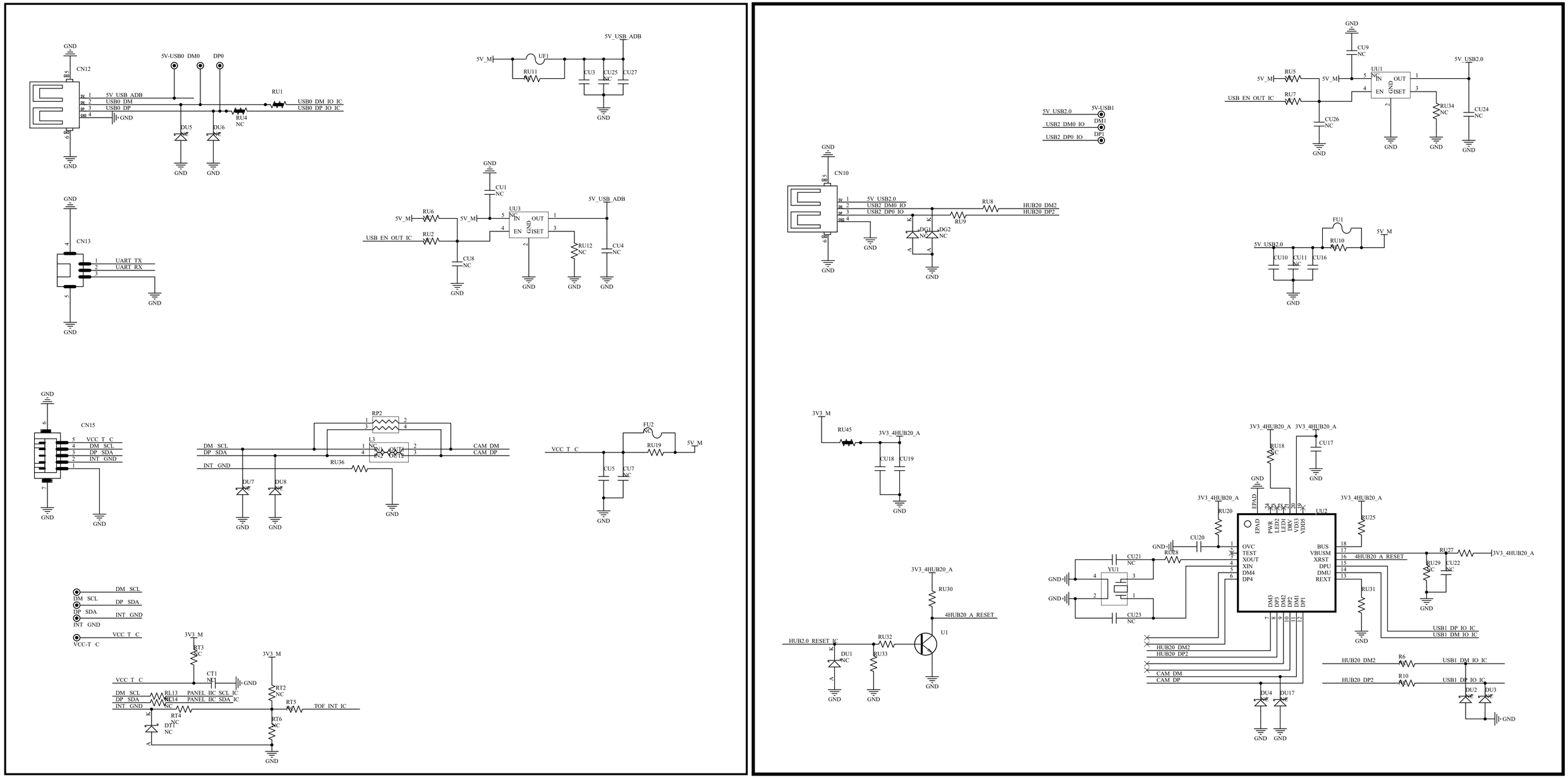
CN12
5V-USB0 DM0
DP0
5V_USB_ADB
USB0_DM
USB0_DP
USB0_DM_IO_IC
USB0_DP_IO_IC
RU1
RU4
NC
DU5
DU6
GND
5V_M
UF1
RU11
CU3
CU25
NC
CU27
5V_USB_ADB
CN13
UART_TX
UART_RX
RU6
RU2
USB_EN_OUT_IC
CU1
NC
UU3
IN
OUT
EN
ISET
CU8
RU12
CU4
CN15
VCC_T_C
DM_SCL
DP_SDA
INT_GND
RP2
L3
RU36
DU7
DU8
CAM_DM
CAM_DP
FU2
RU19
CU5
CU7
VCC-T_C
3V3_M
RT3
CT1
PANEL_IIC_SCL_IC
PANEL_IIC_SDA_IC
RL13
RL14
RT4
DT1
RT2
RT5
RT6
TOF_INT_IC
5V-USB1
USB2_DM0_IO
USB2_DP0_IO
CN10
5V_USB2.0
RU8
RU9
HUB20_DM2
HUB20_DP2
DG1
DG2
CU9
RU5
RU7
CU26
RU34
CU24
FU1
RU10
CU10
CU11
CU16
RU45
3V3_4HUB20_A
CU18
CU19
RU30
4HUB20_A_RESET
HUB2.0_RESET_IC
RU32
RU33
DU1
U1
RU18
CU17
EPAD
RU20
CU20
RU28
CU21
YU1
CU23
UU2
OVC
TEST
XOUT
XIN
DM4
DP4
PWR
LED2
LED1
DRV
VDD33
VDD25
BUS
VBUSM
XRST
DPU
DMU
REXT
DM3
DP3
DM2
DP2
DM1
DP1
RU25
RU27
RU29
CU22
RU31
USB1_DP_IO_IC
USB1_DM_IO_IC
R6
R10
DU4
DU17
DU2
DU3

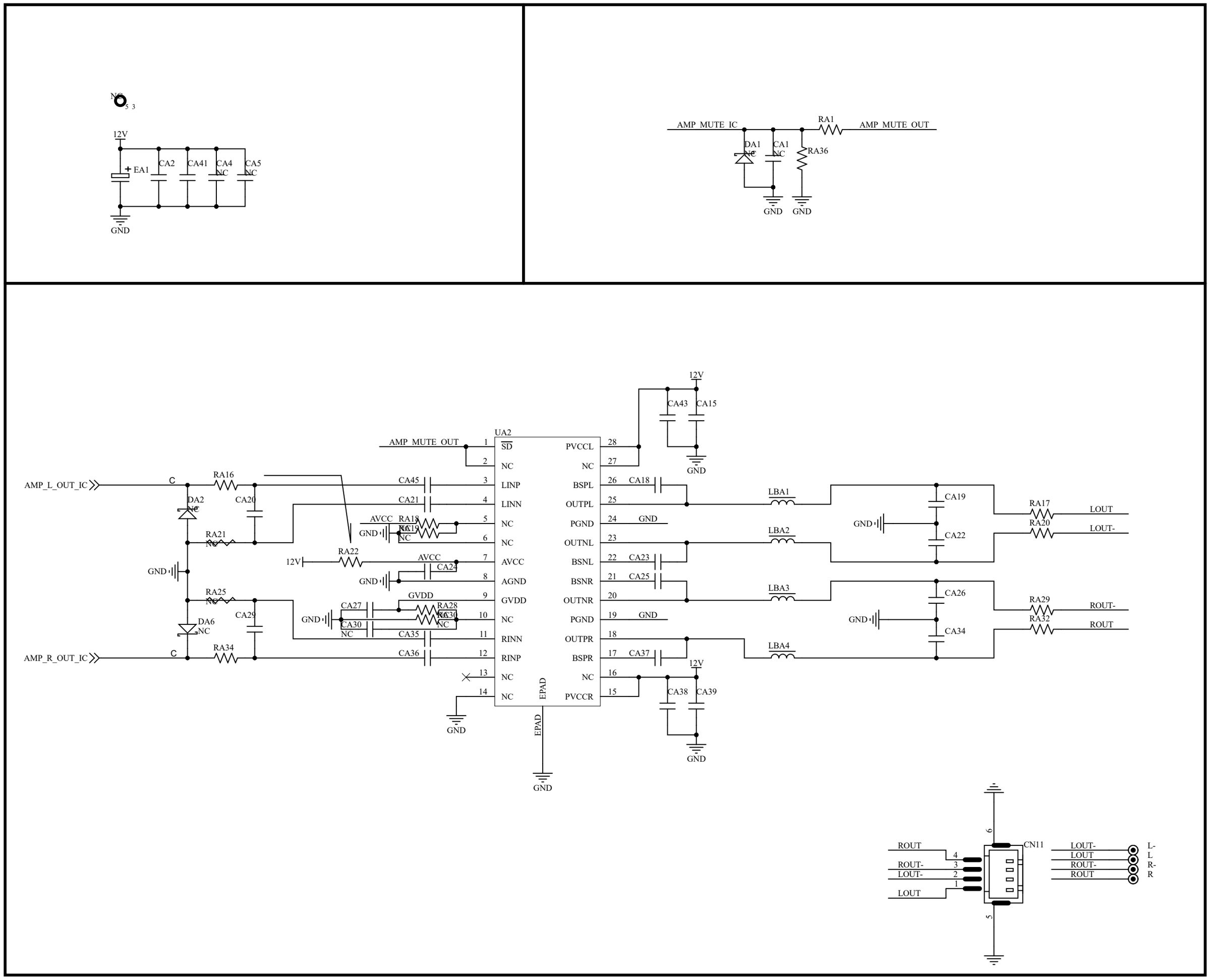
NC
12V
EA1
CA2
CA41
CA4
NC
CA5
NC
GND
AMP_MUTE_IC
RA1
AMP_MUTE_OUT
DA1
NC
CA1
NC
RA36
GND
GND
12V
CA43
CA15
GND
UA2
AMP_MUTE_OUT
SD
NC
LINP
LINN
NC
NC
AVCC
AGND
GVDD
NC
RINN
RINP
NC
NC
EPAD
PVCCL
NC
BSPL
OUTPL
PGND
OUTNL
BSNL
BSNR
OUTNR
PGND
OUTPR
BSPR
NC
PVCCR
AMP_L_OUT_IC
AMP_R_OUT_IC
RA16
DA2
NC
CA20
RA21
NC
RA25
NC
DA6
NC
CA29
RA34
CA45
CA21
AVCC
RA18
NC
RA19
NC
RA22
CA24
GVDD
CA27
RA28
NC
RA30
NC
CA30
NC
CA35
CA36
CA18
CA23
CA25
CA37
CA38
CA39
LBA1
LBA2
LBA3
LBA4
CA19
CA22
CA26
CA34
RA17
RA20
RA29
RA32
LOUT
LOUT-
ROUT-
ROUT
CN11
ROUT
ROUT-
LOUT-
LOUT
LOUT-
LOUT
ROUT-
ROUT
L-
L
R-
R

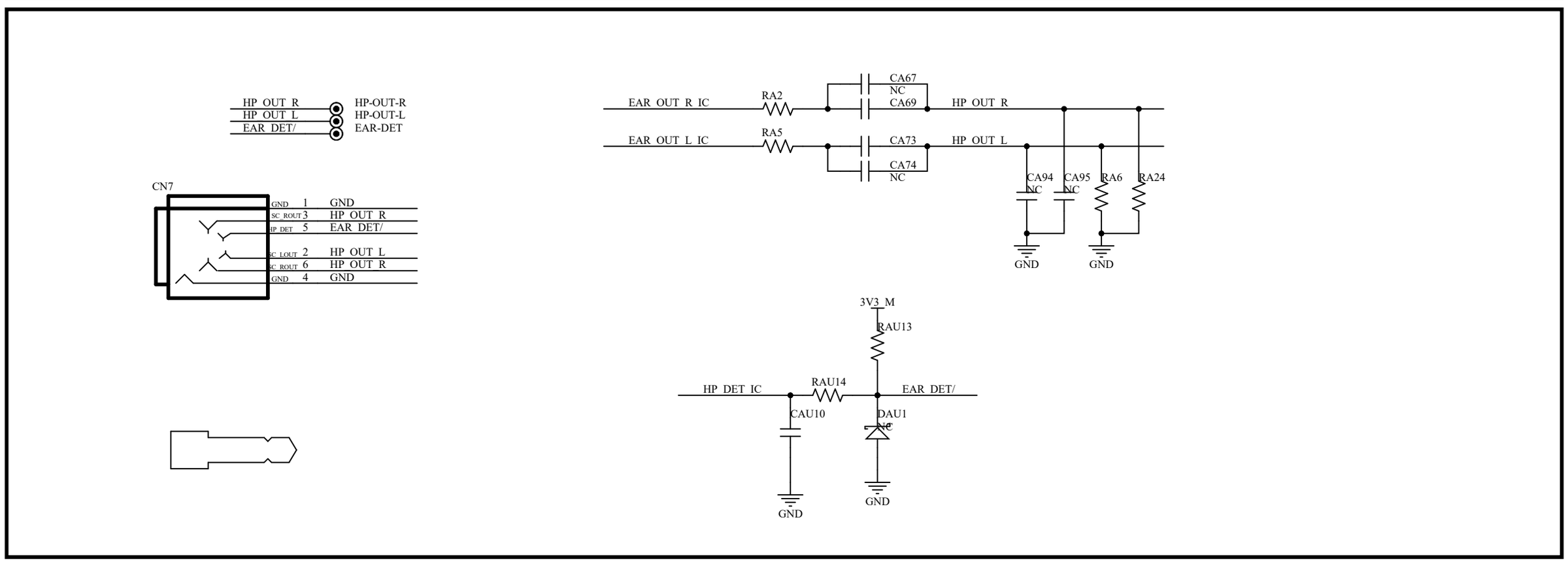
HP_OUT_R
HP_OUT_L
EAR_DET/
HP-OUT-R
HP-OUT-L
EAR-DET
CN7
GND 1 GND
SC_ROUT 3 HP_OUT_R
HP_DET 5 EAR_DET/
SC_LOUT 2 HP_OUT_L
SC_ROUT 6 HP_OUT_R
GND 4 GND
EAR_OUT_R_IC
EAR_OUT_L_IC
RA2
RA5
CA67
NC
CA69
CA73
CA74
NC
HP_OUT_R
HP_OUT_L
CA94
NC
CA95
NC
RA6
RA24
GND
GND
3V3_M
RAU13
HP_DET_IC
RAU14
EAR_DET/
CAU10
DAU1
NC
GND
GND

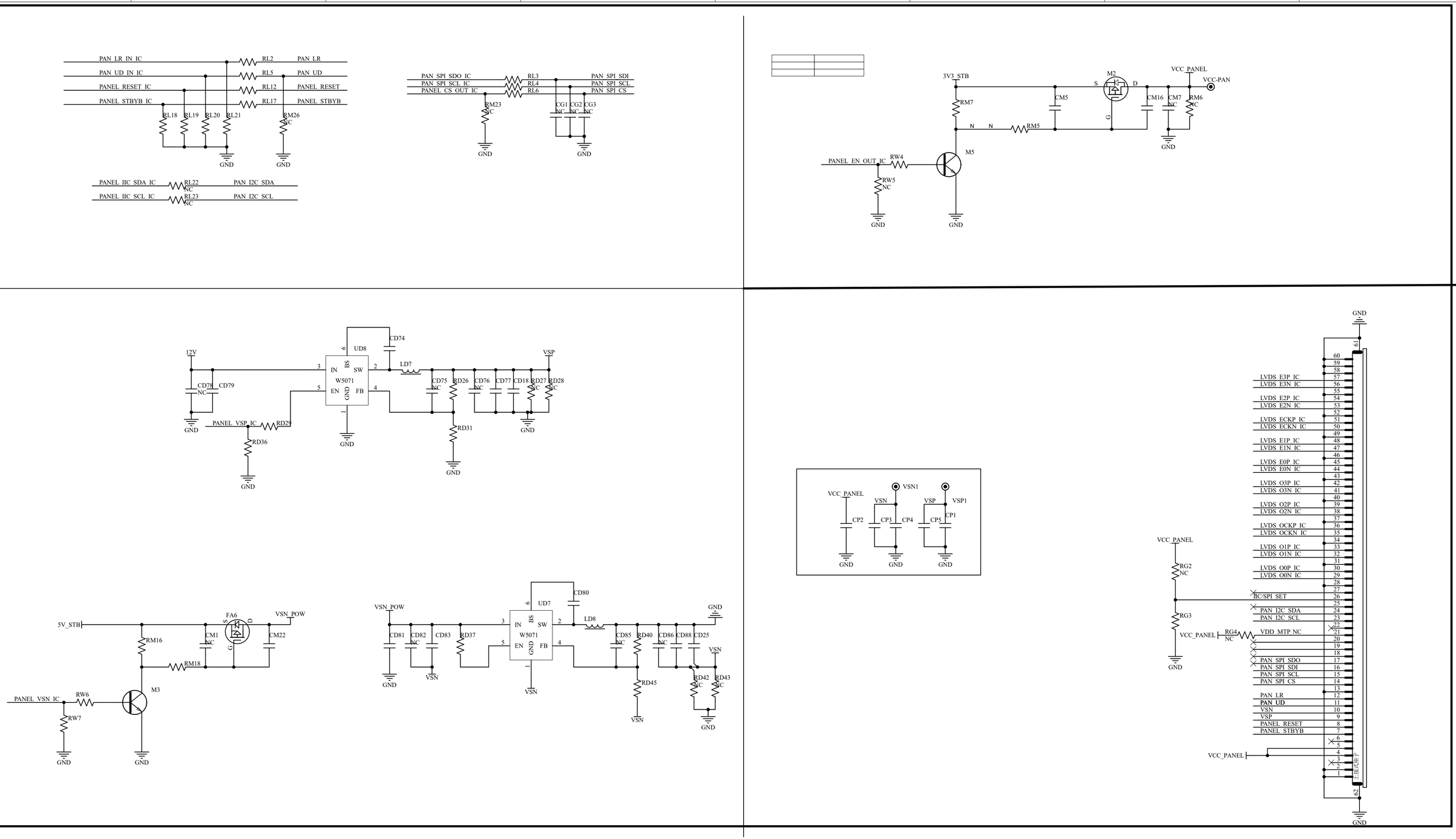
PAN_LR_IN_IC
PAN_UD_IN_IC
PANEL_RESET_IC
PANEL_STBYB_IC
RL2
RL5
RL12
RL17
PAN_LR
PAN_UD
PANEL_RESET
PANEL_STBYB
RL18
RL19
RL20
RL21
RM26
NC
GND
PANEL_IIC_SDA_IC
PANEL_IIC_SCL_IC
RL22
RL23
PAN_I2C_SDA
PAN_I2C_SCL
PAN_SPI_SDO_IC
PAN_SPI_SCL_IC
PANEL_CS_OUT_IC
RL3
RL4
RL6
PAN_SPI_SDI
PAN_SPI_SCL
PAN_SPI_CS
RM23
CG1
CG2
CG3
3V3_STB
RM7
RM5
CM5
M2
S
D
G
VCC_PANEL
VCC-PAN
CM16
CM7
RM6
M5
PANEL_EN_OUT_IC
RW4
RW5
12V
CD74
UD8
BS
IN
SW
W5071
EN
GND
FB
LD7
VSP
CD78
CD79
CD75
RD26
CD76
CD77
CD18
RD27
RD28
PANEL_VSP_IC
RD29
RD36
RD31
VCC_PANEL
CP2
VSN1
VSN
VSP
VSP1
CP3
CP4
CP5
CP1
5V_STB
FA6
VSN_POW
RM16
CM1
CM22
RM18
M3
PANEL_VSN_IC
RW6
RW7
CD80
UD7
CD81
CD82
CD83
RD37
LD8
CD85
RD40
CD86
CD88
CD25
RD45
RD42
RD43
RG2
RG3
RG4
IIC/SPI_SET
PAN_I2C_SDA
PAN_I2C_SCL
VDD_MTP_NC
PAN_SPI_SDO
PAN_SPI_SDI
PAN_SPI_SCL
PAN_SPI_CS
PAN_LR
PAN_UD
VSN
VSP
PANEL_RESET
PANEL_STBYB
LVDS_E3P_IC
LVDS_E3N_IC
LVDS_E2P_IC
LVDS_E2N_IC
LVDS_ECKP_IC
LVDS_ECKN_IC
LVDS_E1P_IC
LVDS_E1N_IC
LVDS_E0P_IC
LVDS_E0N_IC
LVDS_O3P_IC
LVDS_O3N_IC
LVDS_O2P_IC
LVDS_O2N_IC
LVDS_OCKP_IC
LVDS_OCKN_IC
LVDS_O1P_IC
LVDS_O1N_IC
LVDS_O0P_IC
LVDS_O0N_IC
FPC/FFC
G1
G2

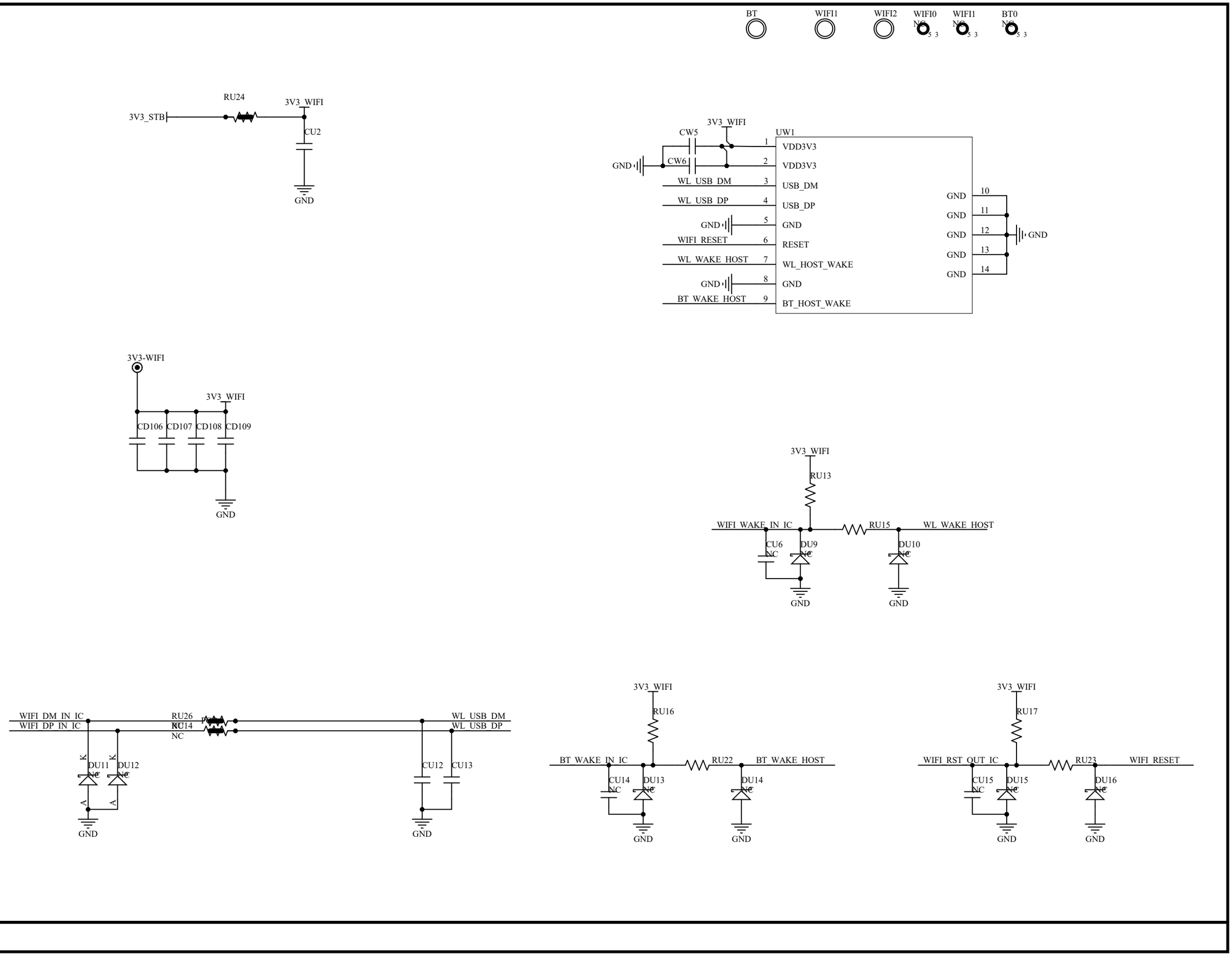
BT
WIFI1
WIFI2
WIFI0
WIFI1
BT0
RU24
3V3_STB
3V3_WIFI
CU2
GND
3V3_WIFI
CW5
CW6
UW1
GND
WL_USB_DM
WL_USB_DP
WIFI_RESET
WL_WAKE_HOST
BT_WAKE_HOST
1 VDD3V3
2 VDD3V3
3 USB_DM
4 USB_DP
5 GND
6 RESET
7 WL_HOST_WAKE
8 GND
9 BT_HOST_WAKE
10 GND
11 GND
12 GND
13 GND
14 GND
3V3-WIFI
3V3_WIFI
CD106 CD107 CD108 CD109
GND
3V3_WIFI
RU13
WIFI_WAKE_IN_IC
RU15
WL_WAKE_HOST
CU6 NC
DU9 NC
DU10 NC
GND
GND
WIFI_DM_IN_IC
WIFI_DP_IN_IC
RU26 NC
RU14 NC
WL_USB_DM
WL_USB_DP
DU11 NC
DU12 NC
CU12
CU13
GND
GND
3V3_WIFI
RU16
BT_WAKE_IN_IC
RU22
BT_WAKE_HOST
CU14 NC
DU13 NC
DU14 NC
GND
GND
3V3_WIFI
RU17
WIFI_RST_OUT_IC
RU23
WIFI_RESET
CU15 NC
DU15 NC
DU16 NC
GND
GND

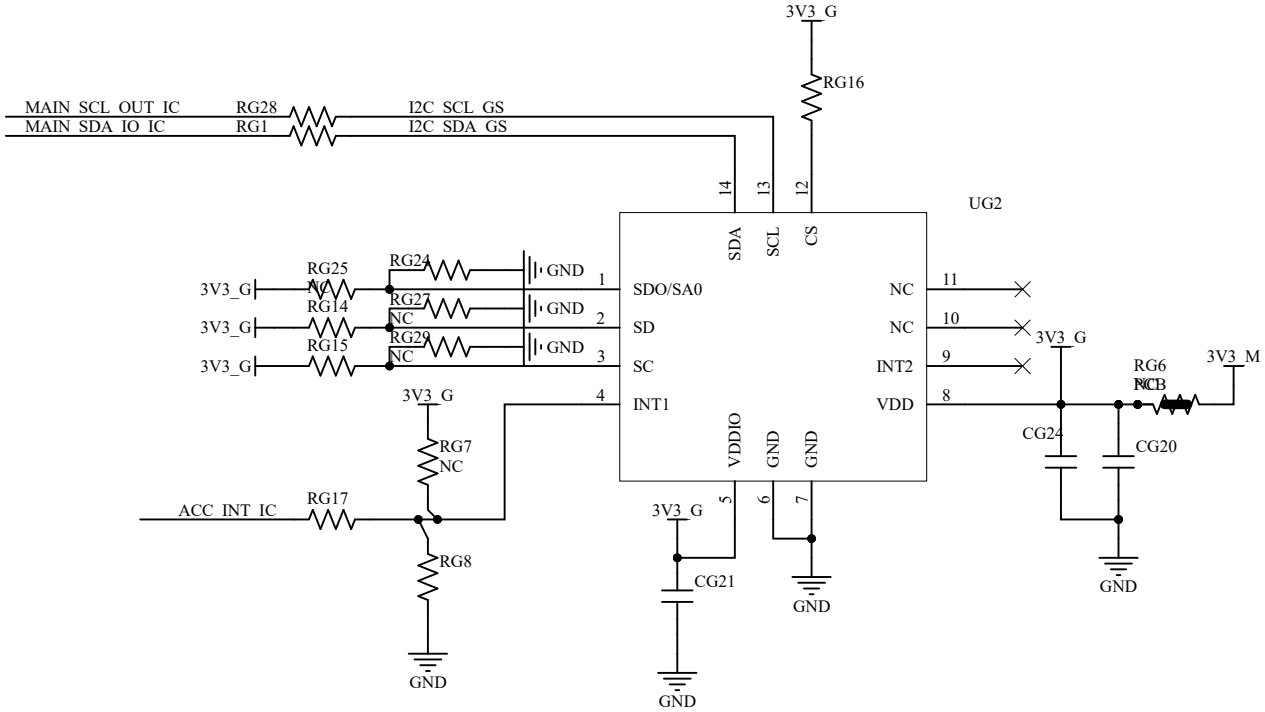

Table 11. SAD+Read/Write patterns

Command	SAD[6:1]	SAD[0] = SA0	R/W	SAD+R/W
Read	110101	0	1	11010101 (D5h)
Write	110101	0	0	11010100 (D4h)
Read	110101	1	1	11010111 (D7h)
Write	110101	1	0	11010110 (D6h)

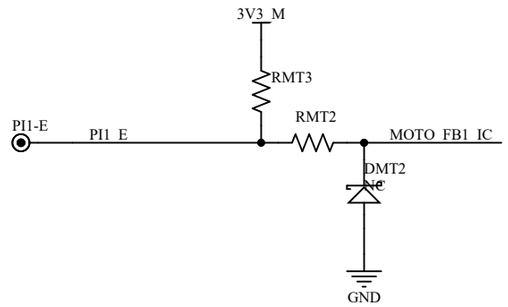
3V3_M
RMT3
RMT2
PI1-E
PI1_E
MOTO_FB1_IC
DMT2
NC
GND

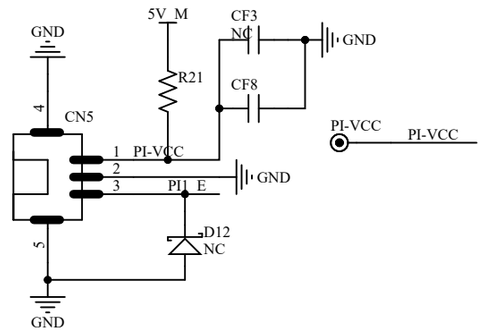
GND
5V_M
CF3
NC
GND
R21
CF8
CN5
4
1
2
3
5
PI-VCC
PI1_E
GND
D12
NC
GND
PI-VCC
PI-VCC

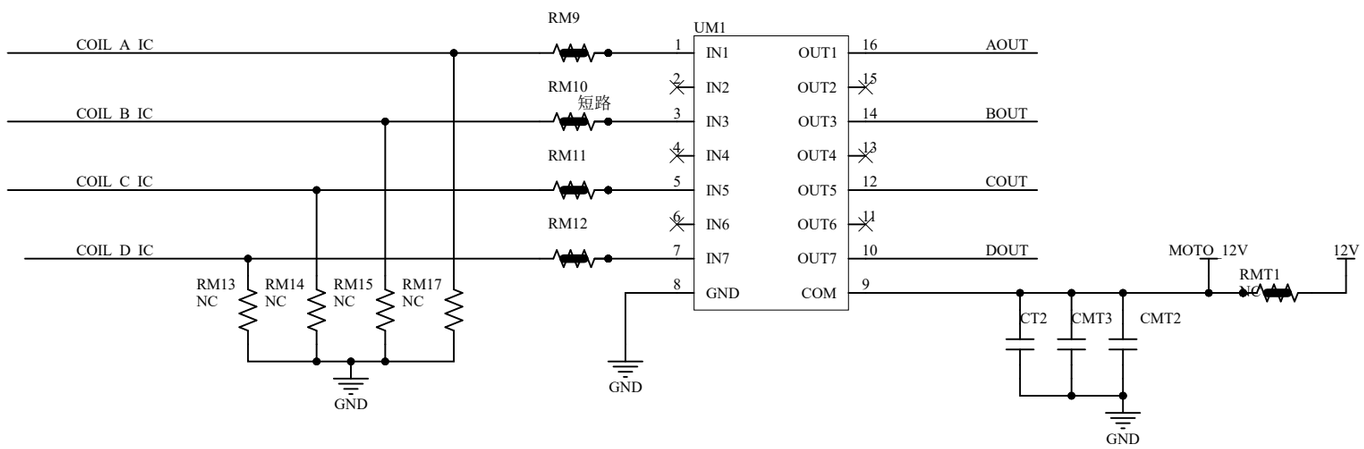
COIL_A_IC
COIL_B_IC
COIL_C_IC
COIL_D_IC
RM9
RM10
短路
RM11
RM12
RM13
NC
RM14
NC
RM15
NC
RM17
NC
GND
UM1
IN1
IN2
IN3
IN4
IN5
IN6
IN7
GND
OUT1
OUT2
OUT3
OUT4
OUT5
OUT6
OUT7
COM
AOUT
BOUT
COUT
DOUT
GND
CT2
CMT3
CMT2
GND
MOTO_12V
RMT1
NC
12V

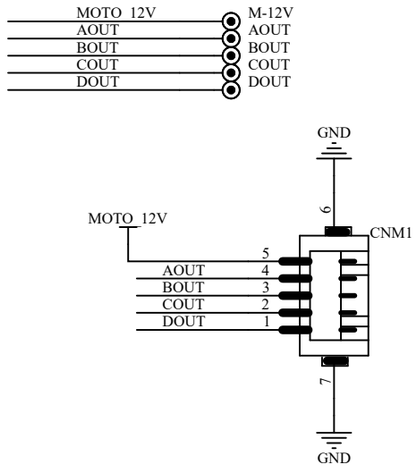
MOTO_12V
AOUT
BOUT
COUT
DOUT
M-12V
AOUT
BOUT
COUT
DOUT
GND
MOTO_12V
CNM1
6
5
4
3
2
1
7
AOUT
BOUT
COUT
DOUT
GND

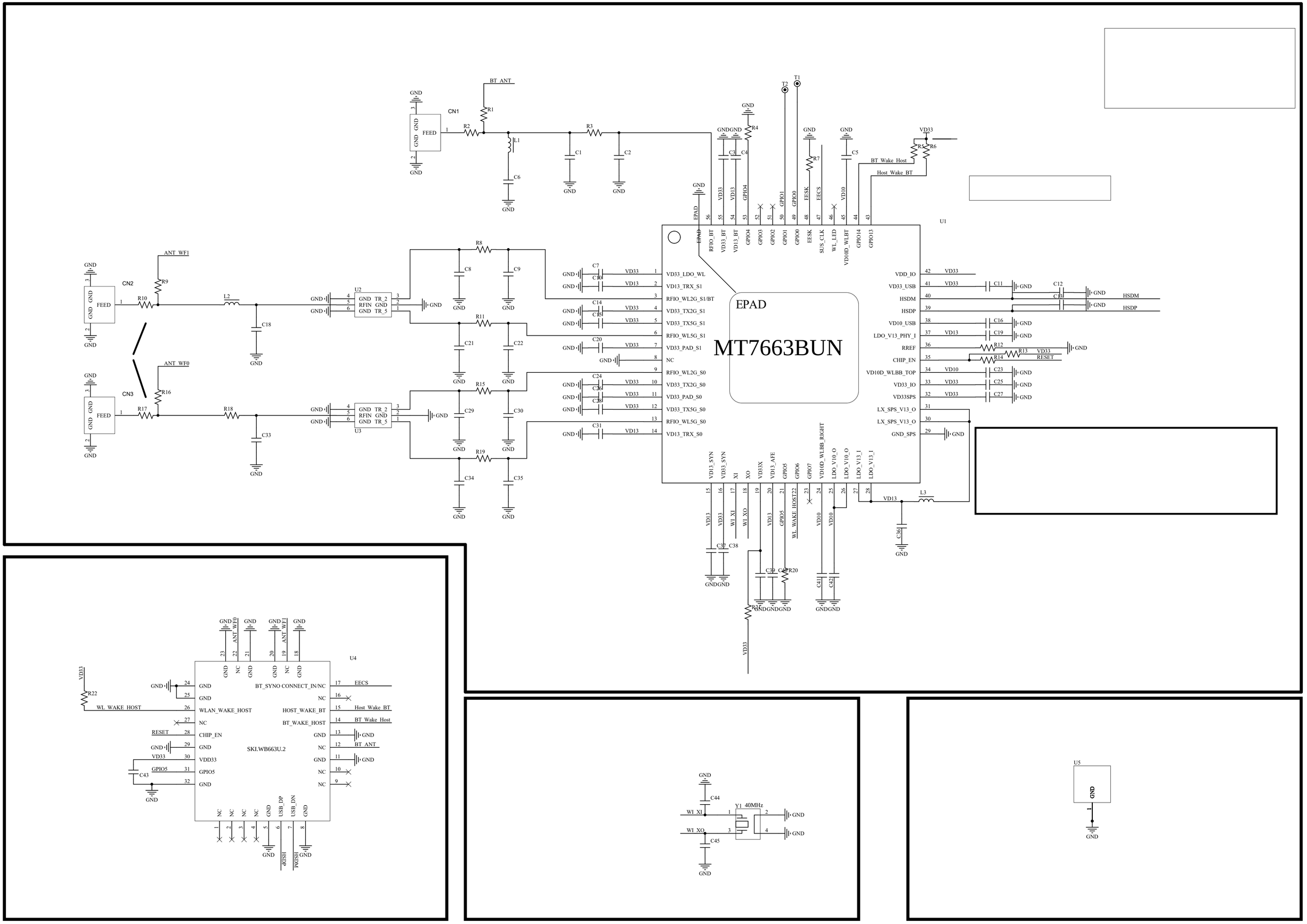
MT7663BUN
EPAD
U1
U2
U3
U4
U5
CN1
CN2
CN3
FEED
BT_ANT
ANT_WF1
ANT_WF0
BT_Wake_Host
Host_Wake_BT
HSDM
HSDP
RESET
EECS
SKI.WB663U.2
WL_WAKE_HOST
Y1 40MHz
W1_XI
W1_XO
GND
VD33
VD13

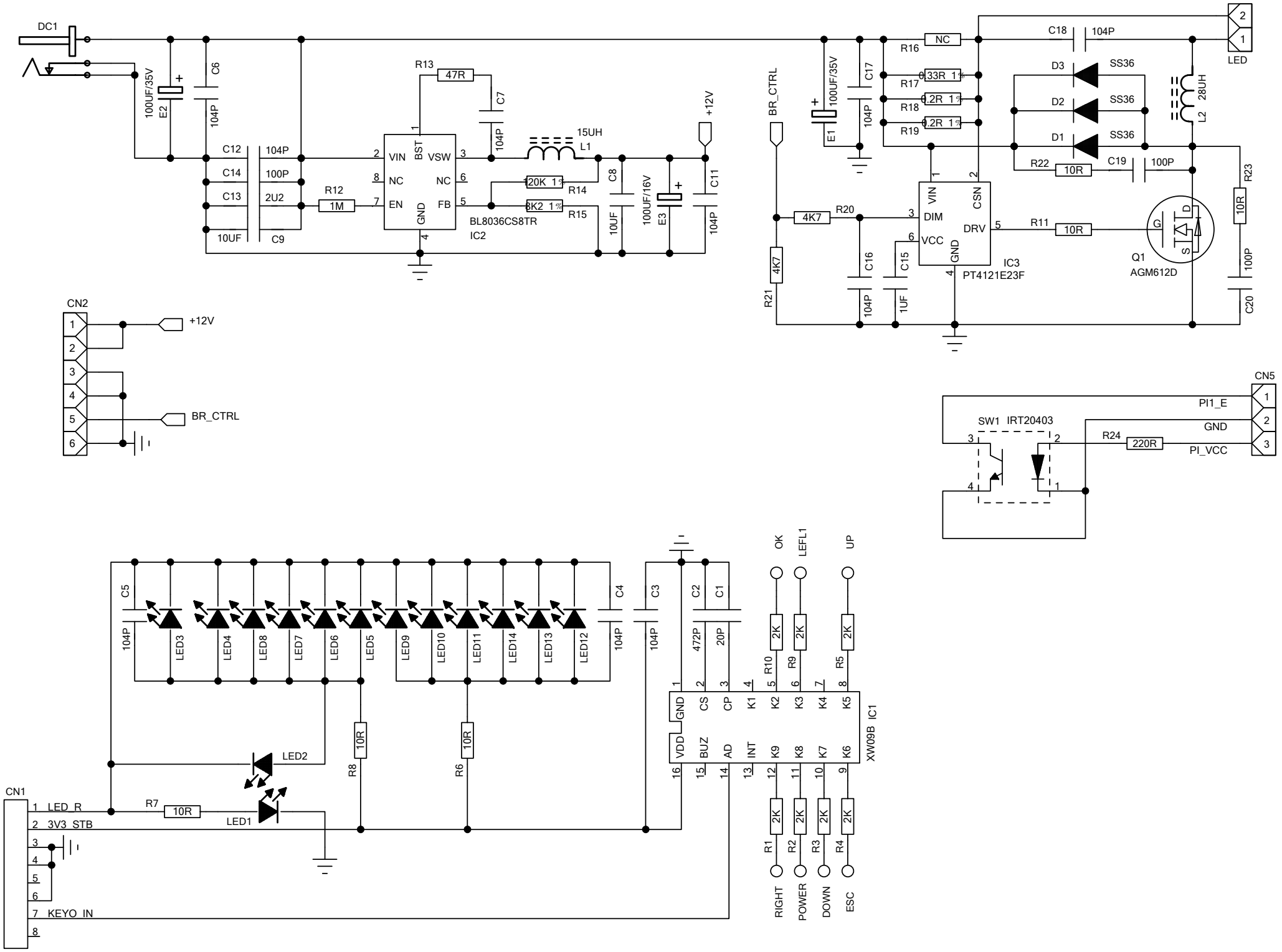
DC1
100UF/35V
E2
C6
104P
C12
104P
C14
100P
C13
2U2
10UF
C9
R12
1M
R13
47R
C7
104P
VIN
BST
VSW
NC
NC
EN
GND
FB
BL8036CS8TR
IC2
15UH
L1
120K 1%
R14
8K2 1%
R15
C8
10UF
100UF/16V
E3
C11
104P
+12V
BR_CTRL
4K7
R20
4K7
R21
C16
104P
C15
1UF
VIN
CSN
DIM
DRV
VCC
GND
IC3
PT4121E23F
R11
10R
Q1
AGM612D
100100UF/35V
E1
C17
104P
R16
NC
R17
33R 1%
R18
1.2R 1%
R19
1.2R 1%
C18
104P
D3
SS36
D2
SS36
D1
SS36
L2
28UH
R22
10R
C19
100P
R23
10R
100P
C20
LED
CN2
+12V
BR_CTRL
CN5
PI1_E
GND
PI_VCC
SW1 IRT20403
R24
220R
C5
104P
LED3
LED4
LED8
LED7
LED6
LED5
LED9
LED10
LED11
LED14
LED13
LED12
C4
104P
C3
104P
C2
472P
C1
20P
LED2
R8
10R
R6
10R
R7
10R
LED1
CN1
LED_R
3V3_STB
KEYO_IN
GND
VDD
CS
BUZ
CP
AD
K1
INT
K2
K9
K3
K8
K4
K7
K5
K6
XW09B IC1
R10
2K
R9
2K
R5
2K
R1
2K
R2
2K
R3
2K
R4
2K
OK
LEFL1
UP
RIGHT
POWER
DOWN
ESC