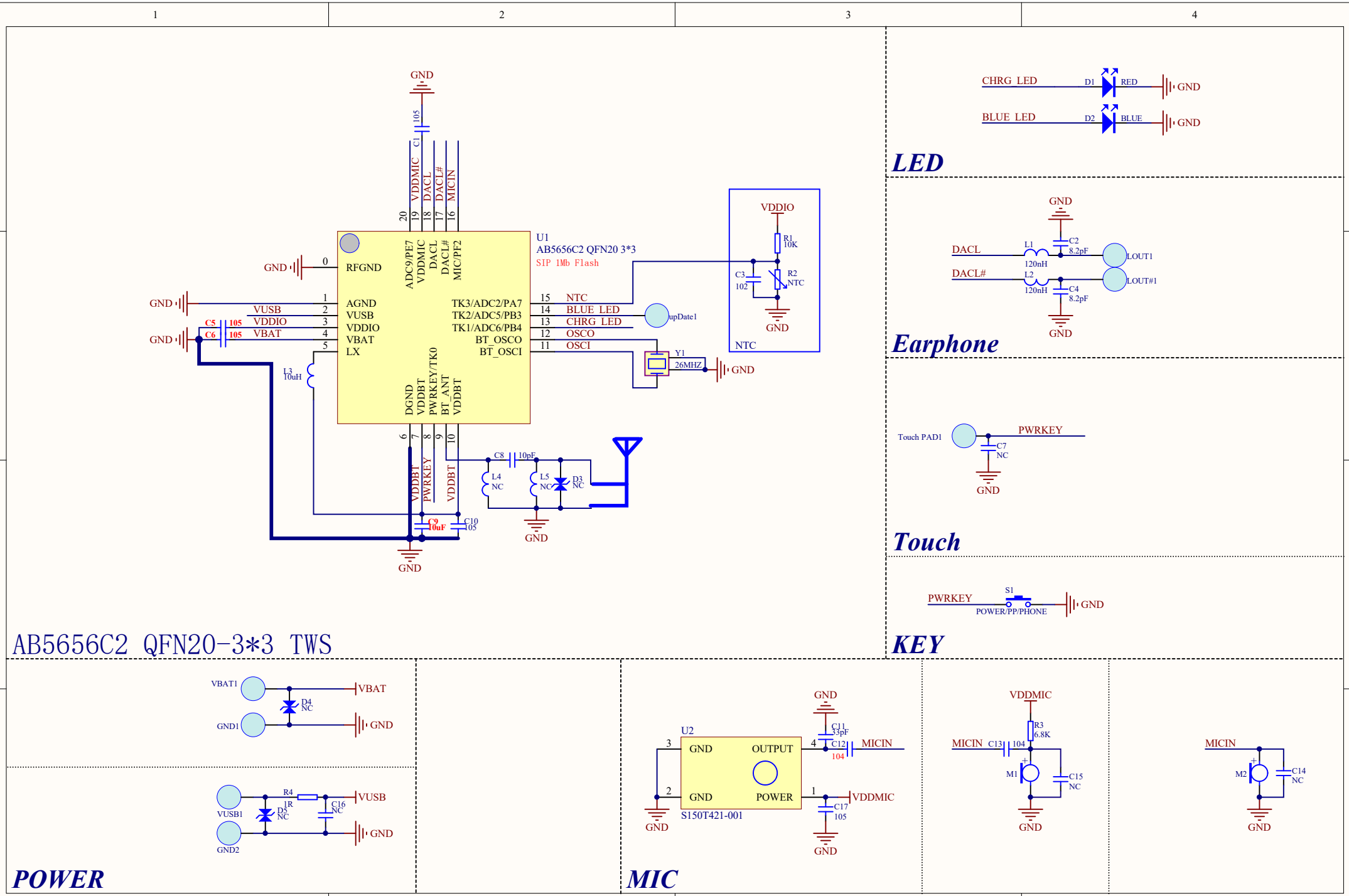

AB5656C2 QFN20-3*3 TWS