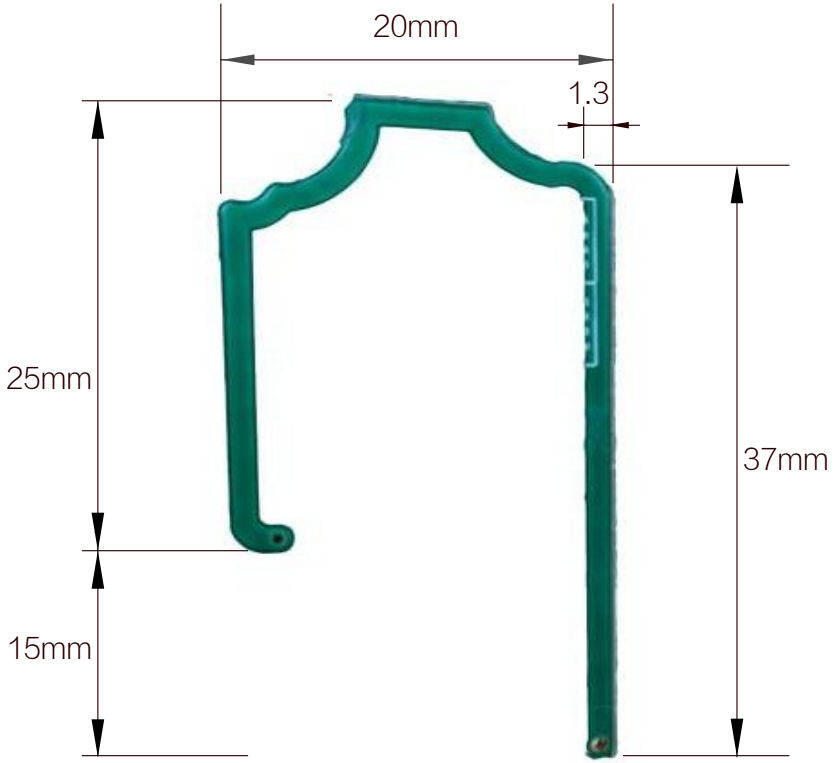

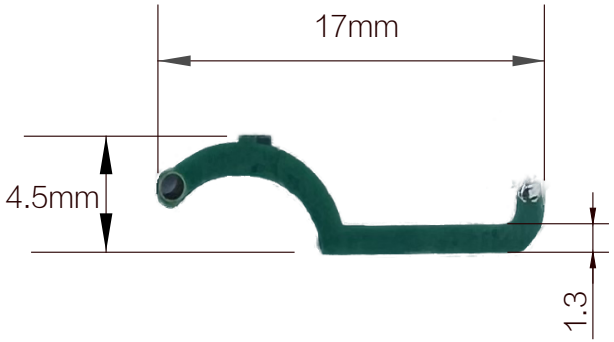

1、35um*.3mm

				LAIDISHINE 莱迪生		Name	Remote Control Antenna Specification		NingBo Laidishine Electronic Technology CO.,LTD.			
						Customer ID	LTH					
				THE FIRST ANGLE		Drawing NO.			Designed	Checked	Approved	
1		2023-7-27										
				A4	A0	PP+15%POM			Sheet: 1/1		2023-7-27	