Angle general tolerance	±0.5°

General tolerance of Linear dimensions

Size Range	Affected by Mold parts	Not affected by Mold parts	Size Range	Affected by Mold parts	Not affected by Mold parts
0～1	±0.08	±0.18	>30～40	±0.20	±0.30
>1～3	±0.09	±0.19	>40～53	±0.24	±0.34
>3～6	±0.10	±0.20	>53～70	±0.28	±0.38
>6～10	±0.11	±0.21	>70～90	±0.34	±0.44
>10～15	±0.13	±0.23	>90～120	±0.41	±0.51
>15～22	±0.15	±0.25	>120～160	±0.50	±0.60
>22～30	±0.17	±0.27			

REVISIONS

REV.	ECN NO.	DESCRIPTION	DESIGN	APPROVAL	DATE
A1	----	初版发行	白雪平	王林伟	20201112

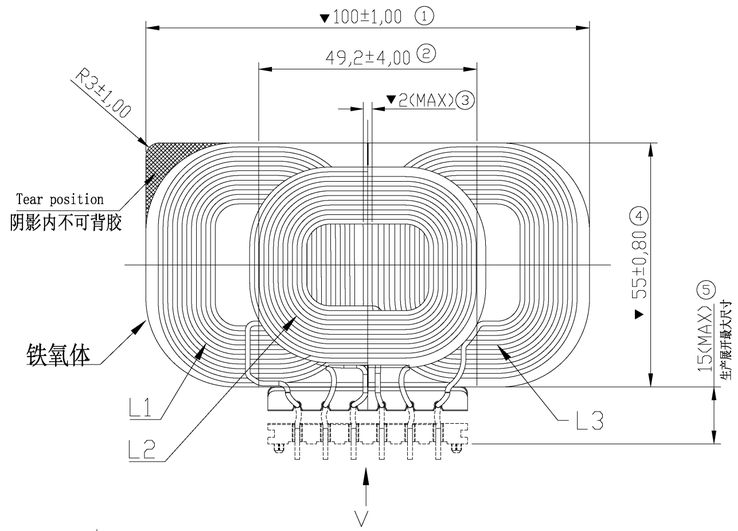

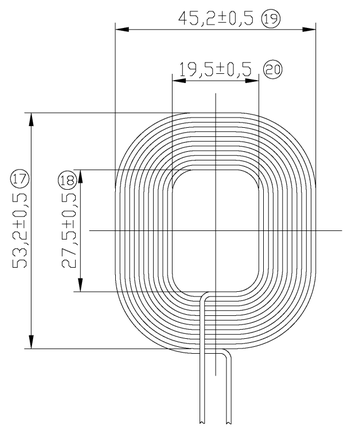

绕线尺寸,12 Truns(2x)

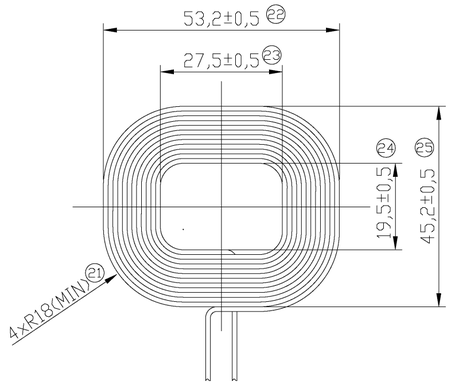

绕线尺寸,12 Truns

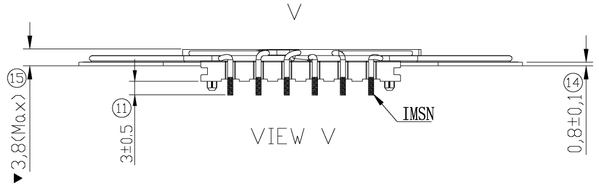

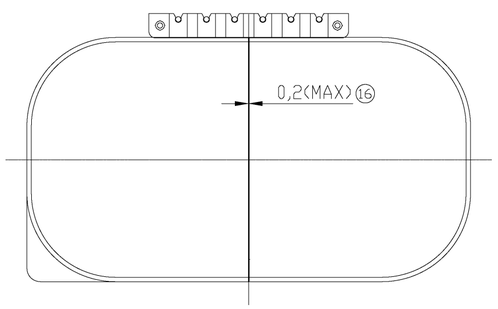

NOTS:

1. L2=11.5uH±%10 (100KHz1.0V) ,L1=L3=12.5uH±%10 (100KHz1.0V) ;
2. DCR1=DCR2=DCR3: 60mΩMAX;
3. L1=L2=L3 TURNS: 12TS 40AWG Φ0.08x105P;
4. Ope.Temp:-40To105℃; Store.Temp:-40To125℃;
5. Core material:PC95;
6. Temperature resistance:
   Coil adhesive:-55℃-180℃;
   Double coated tissue tape:-55℃-120℃;
7. Test Requirement:
   7.1. Low test:-40℃,550H,After testing,the part without tackless/damage/serious discoloration,etc.
   7.2. High test:105℃,1500H,After testing,the part without tackless/damage/serious discoloration,etc.
8. Other Requirement: Other reference "qi Wireless Power consortium 1.2.4" standards;
9. Environment Requirement: All materials and process must be meet the requirement QW-Q-033.

K	Ppk≥2.0,Cpk≥1.67
▽	Ppk≥1.67,Cpk≥1.33
▼	SPOT CHECK
MARK	CONTROL METHOD

THESE DRAWINGS AND SPECIFICATIONS ARE THE PROPERTY OF LUXSHARE-ICT AND SHALL NOT BE REPRODUCED, COPIED OR CUED IN ANY MANNER WITHOUT THE PRIOR WRITTEN CONSENT OF LUXSHARE-ICT

CUSTOMER P/N: N/A
CUSTOMER REV: N/A
PART NO.: 90-B0000499
DWG NO: 90-B0000499
APPD:
CHKD:
DRAW:

LUXSHARE-ICT
TITLE: WPC013-014 COIL ASSEMBLEY
MATERIAL: ___

DESIGN WEIGHT	SAMPLE WEIGHT	SIZE
45g	44G	A3
	SCALE	SHEET	REV.
	1:1	1/1	A1

REV.	ZONE	CHANGE DESCRIPTION	ECO	DD/MMM/YYYY	DESIGNER
A	-	RELEASE FOR PRODUCTION	85384	17/DEC/2020	XUEPING

©BCS AUTOMOTIVE INTERFACE SOLUTIONS

THIS DRAWING AND THE DESIGNS AND DATA DEPICTED IN IT ARE THE CONFIDENTIAL PROPERTY OF BCS AIS AND ITS SUBSIDIARY COMPANIES, WHO RESERVE ALL RIGHTS THEREIN. BY ACCEPTINGTHIS DRAWING, THE RECIPIENT AGREES NOT TO COPY, USE, MANUFACTURE, OR COMMUNICATE TO OTHERS, WHOLLY OR IN PART, EITHER THIS DRAWING OR THE DESIGNS OR DATA DEPICTED IN IT EXCEPT AS EXPRESSLY AUTHORIZED IN WRITING BY BCS AIS OR THE BCS SUBSIDIARY DELIVERING THIS DRAWING.

RELEASE	NAME - SITE	DD-MMM-YYYY
DESIGNER	Xueping Bai -SUZHOU	17-Dec-2019
ENGINEER	Paul Ma -SUZHOU	

CAD SYSTEM: UG NX

LuXshare BCS AUTOMOTIVE INTERFACE SOLUTIONS

ALLOWABLE DEVIATION OF DIMENSIONS WITHOUT TOLERANCES

LENGTH	TOL
<=5	±0.10
5<=10	±0.15
10<=30	±0.25
30<=70	±0.35
70<=120	±0.45
120<=200	±0.60
>200	±0.80

1st ANGLE PROJECTION
METHODE-ISO/R128
ANGLE TOL ±1°
WEIGHT OF PART 45 g

UNLESS OTHERWISE SPECIFIED DIMENSIONS ARE IN MILLIMETERS

PREPARED IN ACCORDANCE WITH DIN EN ISO 8015

PART NAME & LUXSHARE P/NO.
90-B0000499 WPC013 COIL ASM
LUXSHARE P/NO.: 90-B0000499

LAST USED 25

PART SUPERSEDES
X

DRAWING NUMBER
17044345-01

SHEET NUMBER	FORMAT	REV.
1 OF 1	A2	A

H. Rev. A

PAPIERKOPIEN UNTERLIEGEN NICHT DEM ÄENDERUNGSDIENST
PRINTED COPIES ARE UNCONTROLLED