ACCREDITED
CERT # 5473.03

No.:
FCCSZ2024-0010-RF3

TEST REPORT

FCC ID	**:**	**2BAC7-ARESSE**
NAME OF SAMPLE	**:**	**Smart Home Camera**
APPLICANT	**:**	**QSEE TECHNOLOGY**
CLASSIFICATION OF TEST	**:**	**N/A**

CVC Testing Technology (Shenzhen) Co., Ltd.

Applicant	**Name: QSEE TECHNOLOGY** **Address: 17890 Castleton St, ste398, City of Industry CA91748**		
Manufacturer	**Name: Wanjiaan Interconnected Technology Co., Ltd** **Address: 2-3F, Block 3, Jinrui Zhonghe High-Tech Industrial Zone, Huawang Rd, Dalang Street, Longhua District, Shenzhen City, Guangdong Province,P.R. China**		
Equipment Under Test	**Name: Smart Home Camera** **Model/Type: Ares SE** **Additional Model: Ares, Ares Pro, AresXY(X=A-Z, Y=V1-V9)** **Brand: Qsee** **Serial NO.: N/A** **Sample NO.: 4-1**		
Date of Receipt.	**2024.02.29**	Date of Testing	**2024.03.01 ～ 2024.03.29**
Test Specification		**Test Result**	
FCC Part 15, Subpart E, Section 15.407		PASS	
Evaluation of Test Result	The equipment under test was found to comply with the requirements of the standards applied. Seal of CVC **Issue Date: 2024.03.29**		
Tested by: Zhu Yulin **Zhu Yulin** Name Signature	Reviewed by: Mo Xianbiao **Mo Xianbiao** Name Signature	Approved by: **Dong Sanbi** Name Signature	
Other Aspects: NONE.			
Abbreviations:OK, Pass= passed Fail = failed N/A= not applicable EUT= equipment, sample(s) under tested			

This test report relates only to the EUT, and shall not be reproduced except in full, without written approval of CVC.

TABLE OF CONTENTS

1 SUMMARY OF TEST RESULTS 5

1.1 LIST OF TEST AND MEASUREMENT INSTRUMENTS 6
1.2 TEST LOCATION 6

2 GENERAL INFORMATION 7

2.1 GENERAL PRODUCT INFORMATION 7
2.2 TEST MODE APPLICABILITY AND TESTED CHANNEL DETAIL 8
2.3 DESCRIPTION OF SUPPORT UNITS 9

3 REQUIREMENTS AND PARAMETERS FOR DFS TEST 10

3.1 APPLICABILITY OF DFS REQUIREMENTS 10
3.2 DETECTION THRESHOLD VALUES 11
3.3 DFS RESPONSE REQUIREMENT VALUES 11
3.4 PARAMETERS OF DFS TEST SIGNALS 12

4 TEST RESULTS 13

4.1 TEST SETUP OF DFS 13
4.2 DFS DETECTION THRESHOLD 13
4.3 CHANNEL LOADING 14
4.4 CHANNEL CLOSING TRANSMISSION AND CHANNEL MOVE TIME 15
4.5 NON- OCCUPANCY PERIOD 16

5 PHOTOGRAPHS OF THE EUT 18

RELEASE CONTROL RECORD

ISSUE NO.	REASON FOR CHANGE	DATE ISSUED
FCCSZ2024-0010-RF3	Original release	2024.03.29

1 SUMMARY OF TEST RESULTS

The EUT has been tested according to the following specifications:

STANDARD SECTION	TEST TYPE AND LIMIT	RESULT	REMARK
FCC 15.407	Channel Move TIme	PASS	825.5 ms
FCC 15.407	Channel Closing Transmission Time	PASS	200+aggregate of 16.9ms over remaining 10s period.
FCC 15.407	Non-Occupancy Period and Client Beacon Test	PASS	⩾30 min

Note: Since the product is client without radar detection function, only Channel Move Time, Channel Closing Transmission Time and Non-Occupancy Period and Client Beacon Test are required to be performed

1.1 LIST OF TEST AND MEASUREMENT INSTRUMENTS

Equipment	Manufacturer	Model No.	Serial Number	Cal. interval	Cal. Due
Antenna Port Conducted Test					
Signal&Spectrum Analyzer	Rohde&Schwarz	FSV 30	104408	1 year	2024.5.21
#3 Shielding room	MORI	443	N/A	3 year	2026.5.16
Wideband radio communication tester	Rohde&Schwarz	CMW 500	168778	1 year	2024.5.25
Analog signal Generator (100kHz ~ 40GHz)	Rohde&Schwarz	SMB 100A	181934	1 year	2024.5.21
Vector signal Generator (9kHz ~ 6GHz)	Keysight	N5182B	MY57301451	1 year	2024.4.25
Vector signal Generator (9kHz ~ 6GHz)	Rohde&Schwarz	SGT 100A	111724	1 year	2024.5.21
RF control unit(BT/WiFi)	Tonscend	JS0806-2-8CH	20E8060261	1 year	2024.5.21
Temperature and humidity meter	/	C193561457	C193561457	1 year	2024.5.21

1.2 TEST LOCATION

The tests and measurements refer to this report were performed by EMC testing Lab. of CVC Testing Technology (Shenzhen) Co., Ltd.

CABID:CN0137
Lab Address: No. 1301, Guanguang Road, Xinlan Community, Guanlan Street, Longhua District, Shenzhen City, Guangdong Province 518110 P.R.China
Post Code：518110 Tel：0755-23763060-8805
Fax：0755-23763060 E-mail：sz-kf@cvc.org.cn
FCC(Test firm designation number：CN1363)
IC(Test firm CAB identifier number：CN0137)
CNAS(Test firm designation number：L16091)

2 GENERAL INFORMATION

2.1 GENERAL PRODUCT INFORMATION

PRODUCT	Smart Home Camera
BRAND	Qsee
TEST MODEL	Ares SE
ADDITIONAL MODEL	Ares, Ares Pro, AresXY(X=A-Z, Y=V1-V9)
FCC ID	2BAC7-ARESSE
POWER SUPPLY	DC 5V from USB host unit
OPERATING FREQUENCY	5260MHz ~ 5320MHz, 5500MHz ~ 5700MHz
ANTENNA TYPE (Remark 4)	FPC Antenna with 3.66dBi gain
I/O PORTS	Refer to user's manual
CABLE SUPPLIED	N/A
HARDWARE VERSION:	C07-Q5M01-MAIN-V1.3
SOFTWARE VERSION:	V1.00.19
DEVICE TYPE	☐Master ☑Client without radar detection ☐Client with radar detection

Remark:

1. For more detailed features description, please refer to the manufacturer's specifications or the User's Manual.
2. For the test results, the EUT had been tested with all conditions. But only the worst case was shown in test report.
3. EUT photo refer to report (Report NO.: FCCSZ2024-0010-EUT).
4. Please refer to the antenna report.
5. Since the above data and/or information is provided by the client relevant results or conclusions of this report are only made for these data and/or information, CVC is not responsible for the authenticity, integrity and results of the data and information and/or the validity of the conclusion.

2.2 TEST MODE APPLICABILITY AND TESTED CHANNEL DETAIL

BANDWIDTH	CHANNEL	TEST TYPE AND LIMIT
40MHz	CH102	Channel Move TIme
		Channel Closing Transmission Time
		Non-Occupancy Period and Client Beacon Test
Reamrk： This test was investigated for different bandwidth (20MHz, 40MHz). The following plots was worst case.		

2.3 DESCRIPTION OF SUPPORT UNITS

The EUT has been tested as an independent unit together with other necessary accessories or support units. The following support units or accessories were used to form a representative test configuration during the tests.

Support Equipment					
NO	**Description**	**Brand**	**Model No.**	**FCC ID**	**Supplied by**
1	Wireless router	LINKSYS	WRT3200ACM	Q87-WRT3200ACM	Lab
2	Laptop	Lenovo	K4e-ARE120	/	Lab

Support Cable							
NO	**Description**	**Quantity (Number)**	**Length (m)**	**Detachable (Yes/ No)**	**Shielded (Yes/ No)**	**Cores (Number)**	**Supplied by**
1	N/A	N/A	N/A	N/A	N/A	N/A	N/A

3 REQUIREMENTS AND PARAMETERS FOR DFS TEST

3.1 APPLICABILITY OF DFS REQUIREMENTS

APPLICABILITY OF DFS REQUIREMENTS PRIOR TO USE A CHANNEL

REQUIREMENT	OPERATIONAL MODE		
	MASTER	CLIENT WITHOUT RADAR DETECTION	CLIENT WITH RADAR DETECTION
Non-Occupancy Period	✓	✓	✓
DFS Detection Threshold	✓	Not required	✓
Channel Availability Check Time	✓	Not required	Not required
Uniform Spreading	✓	Not required	Not required
U-NII Detection Bandwidth	✓	Not required	✓

APPLICABILITY OF DFS REQUIREMENTS DURING NORMAL OPERATION

REQUIREMENT	OPERATIONAL MODE		
	MASTER	CLIENT WITHOUT RADAR DETECTION	CLIENT WITH RADAR DETECTION
DFS Detection Threshold	✓	Not required	✓
Channel Closing Transmission Time	✓	✓	✓
Channel Move Time	✓	✓	✓
U-NII Detection Bandwidth	✓	Not required	✓

3.2 DETECTION THRESHOLD VALUES

DFS DETECTION THRESHOLDS FOR MASTER DEVICES AND CLIENT DEVICES WITH RADAR DETECTION

MAXIMUM TRANSMIT POWER	VALUE (SEE Note 1 and 2)
≥ 200 milliwatt	-64 dBm
< 200 milliwatt	-62 dBm

Note 1: This is the level at the input of the receiver assuming a 0 dBi receive antenna.

Note 2: Throughout these test procedures an additional 1 dB has been added to the amplitude of the test transmission waveforms to account for variations in measurement equipment. This will ensure that the test signal is at or above the detection threshold level to trigger a DFS response.

3.3 DFS RESPONSE REQUIREMENT VALUES

PARAMETER	VALUE
Non-occupancy period	Minimum 30 minutes
Channel Availability Check Time	60 seconds
Channel Move Time	10 seconds See Note 1.
Channel Closing Transmission Time	200 milliseconds + an aggregate of 60 milliseconds over remaining 10 second period. See Notes 1 and 2.
U-NII Detection Bandwidth	100% of the UNII transmission power bandwidth. See Note 3.

Note 1: The instant that the Channel Move Time and the Channel Closing Transmission Time begins is as follows:

• For the Short Pulse Radar Test Signals this instant is the end of the Burst.

• For the Frequency Hopping radar Test Signal, this instant is the end of the last radar Burst generated.

• For the Long Pulse Radar Test Signal this instant is the end of the 12 second period defining the Radar Waveform.

Note 2: The Channel Closing Transmission Time is comprised of 200 milliseconds starting at the beginning of the Channel Move Time plus any additional intermittent control signals required to facilitate a Channel move (an aggregate of 60 milliseconds) during the remainder of the 10 second period. The aggregate duration of control signals will not count quiet periods in between transmissions.

Note 3: During the U-NII Detection Bandwidth detection test, radar type 1 is used and for each frequency step the minimum percentage of detection is 90 percent. Measurements are performed with no data traffic.

3.4 PARAMETERS OF DFS TEST SIGNALS

Step intervals of 0.1 microsecond for Pulse Width, 1 microsecond for PRI, 1 MHz for chirp width and 1 for the number of pulses will be utilized for the random determination of specific test waveforms.

Short Pulse Radar Test Waveforms

Radar Type	Pulse Width (µsec)	PRI (µsec)	Number of Pulses	Minimum Percentage of Successful Detection	Minimum Number of Trials
0	1	1428	18	See Note 1	See Note 1
1	1	Test A Test B	$\text{Roundup}\left\{\left(\frac{1}{360}\right)\cdot\left(\frac{19\cdot 10^6}{PRI_{\mu sec}}\right)\right\}$	60%	30
2	1-5	150-230	23-29	60%	30
3	6-10	200-500	16-18	60%	30
4	11-20	200-500	12-16	60%	30
Aggregate (Radar Types 1-4)				80%	120
Note 1: Short Pulse Radar Type 0 should be used for the detection bandwidth test, channel move time, and channel closing time tests.					

LONG PULSE RADAR TEST WAVEFORM

RADAR TYPE	PULSE WIDTH (µsec)	CHIRP WIDTH (MHz)	PRI (µsec)	NUMBER OF PULSES PER BURST	NUMBER OF BURSTS	MINIMUM PERCENTAGE OF SUCCESSFUL DETECTION	MINIMUM NUMBER OF TRIALS
5	50-100	5-20	1000-2000	1-3	8-20	80%	30

FREQUENCY HOPPING RADAR TEST WAVEFORM

RADAR TYPE	PULSE WIDTH (µsec)	PRI (µsec)	PULSES PER HOP	HOPPING RATE (kHz)	HOPPING SEQUENCE LENGTH (msec)	MINIMUM PERCENTAGE OF SUCCESSFUL DETECTION	MINIMUM NUMBER OF TRIALS
6	1	333	9	0.333	300	70%	30

4 TEST RESULTS

4.1 TEST SETUP OF DFS

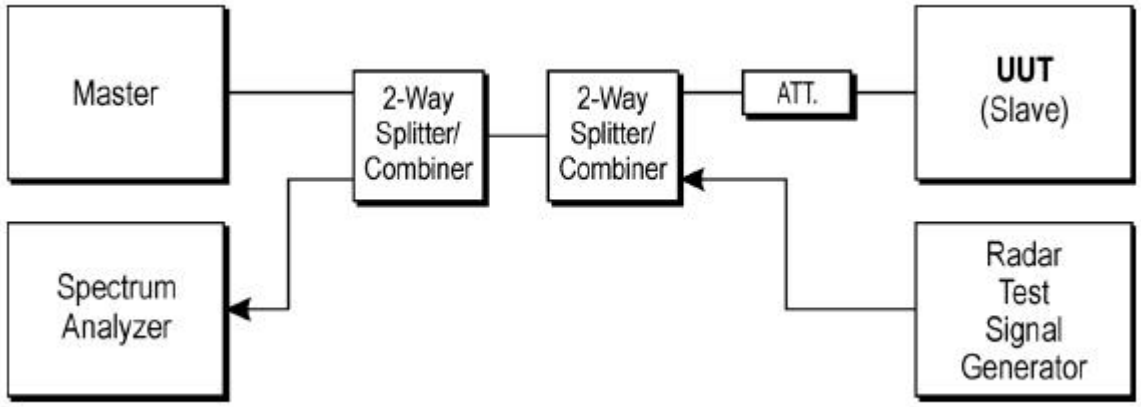

4.2 DFS DETECTION THRESHOLD

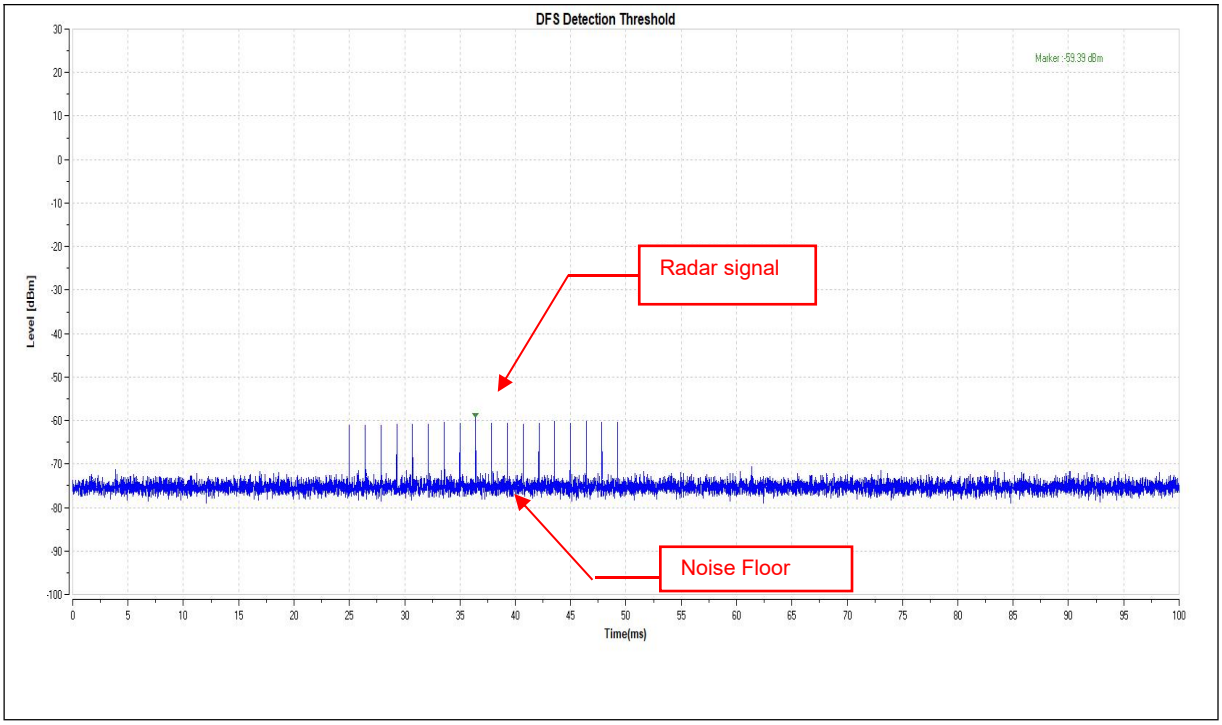

4.3 CHANNEL LOADING

The radar signal was the same as transmitted channels, and injected into the antenna port of AP (master) with radar signal, measured the channel shutdown. The slave transmitted the test data to master, the transmitted duty cycle is 25.2%.

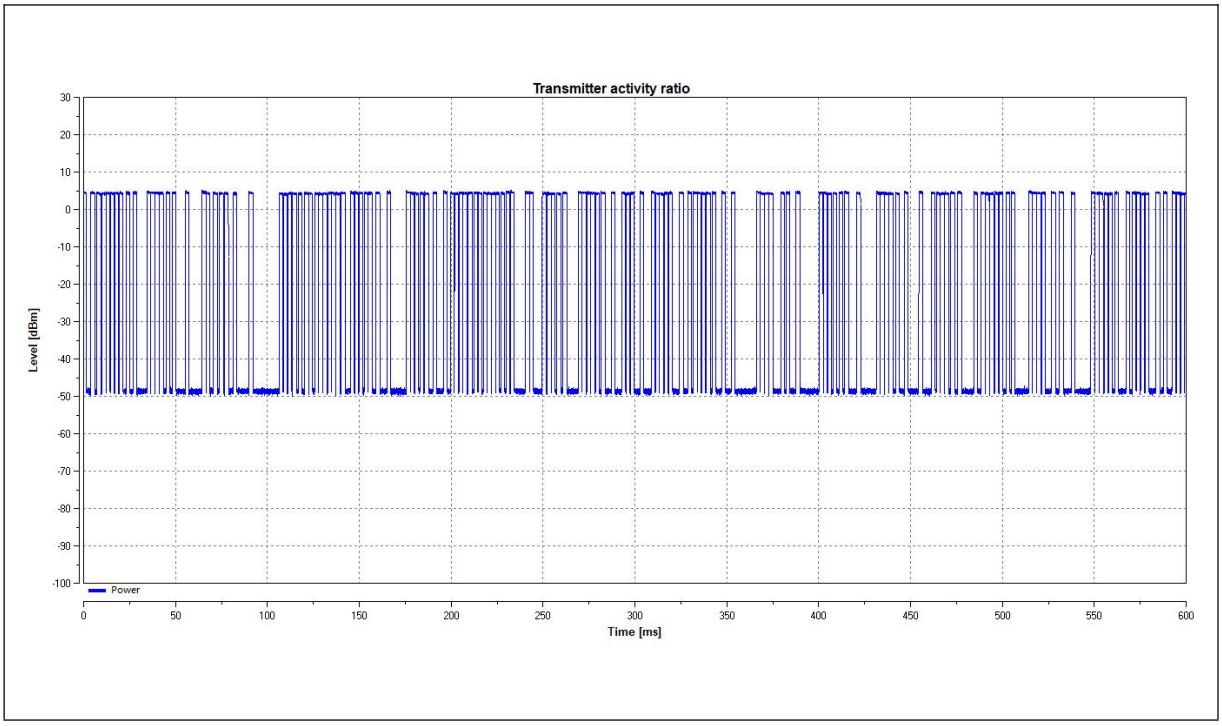

Note: Traffic signal: from slave transmit to master.

4.4 CHANNEL CLOSING TRANSMISSION AND CHANNEL MOVE TIME

Radar Signal 0

Channel Move Time(ms)	570.4	Channel Closing Transmission Time(ms)	200+7.8

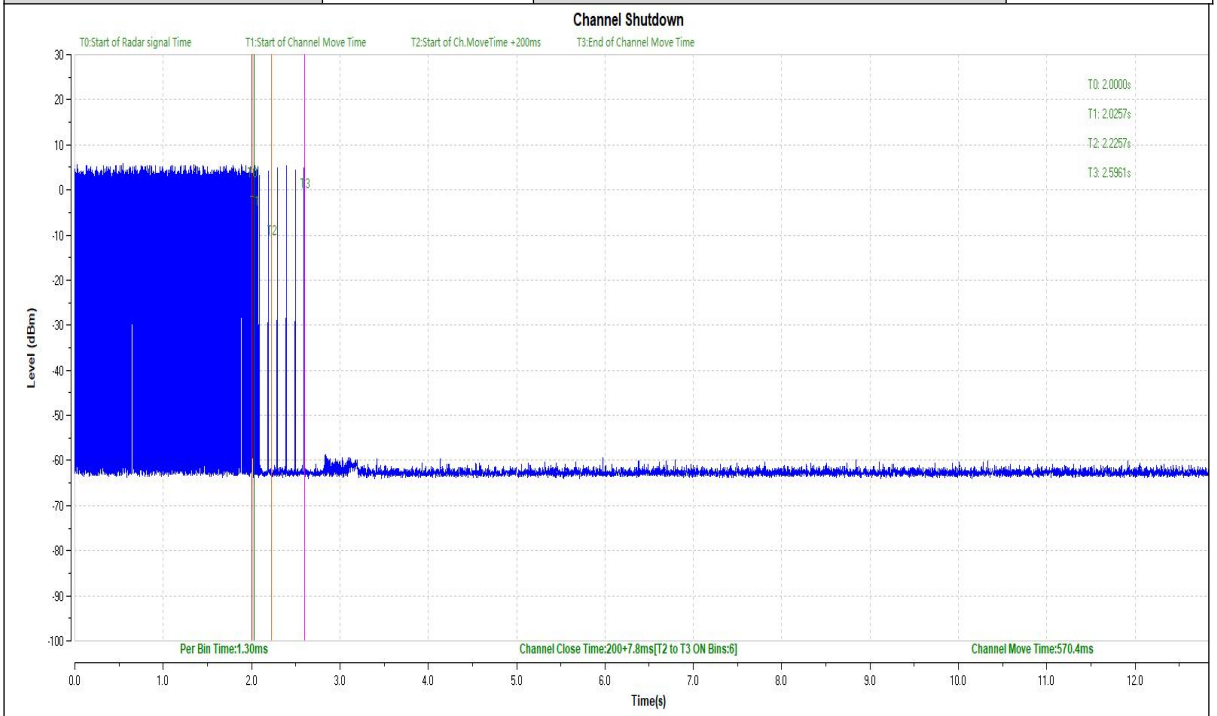

NOTE:

1.T0 denotes the Start of Rader Singnl Time.
2.T1 denotes the Start of Channel Move Time.
3.T2 denotes the Start of Channel Move Time + 200ms.
4.T3 denotes the End of Channel Move Time.
5.Per Bin Time = Sweep time (13000ms) / Sweep Point Bins (10000) =1.3ms
6.Channel Closing Transmission Time(200 + 7.8ms) = 200+ ON Bins* Per Bin Time

4.5 NON- OCCUPANCY PERIOD

1) Test results demonstrating an associated client link is established with the master on a test frequency
2) The client and DFS-certified master device are associated, and system testing will be performed with channel-loading for a non-occupancy period test.
3). The device transmits one type of radar as specified in the DFS Order.
4) The test frequency has been monitored to ensure no transmission of any type has occurred for 30 minutes;
Note: If the client moves with the master, the device is considered compliant if nothing appears in the client non-occupancy period test. For devices that shut down (rather than moving channels), no beacons should appear;
5)An analyzer plot that contains a single 30-minute sweep on the original test frequency.

NON- OCCUPANCY PERIOD

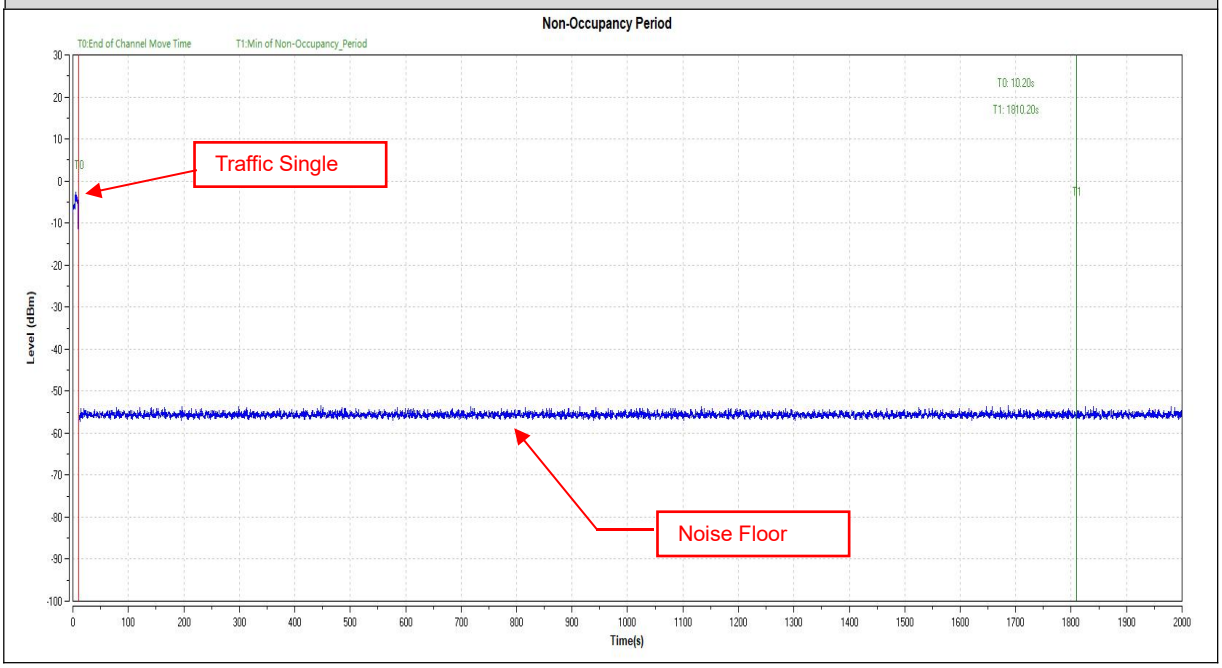

Master was off.
During the 30 minutes observation time, The UUT did not make any transmissions in the DFS band after UUT power up

NON-ASSOCIATED TEST

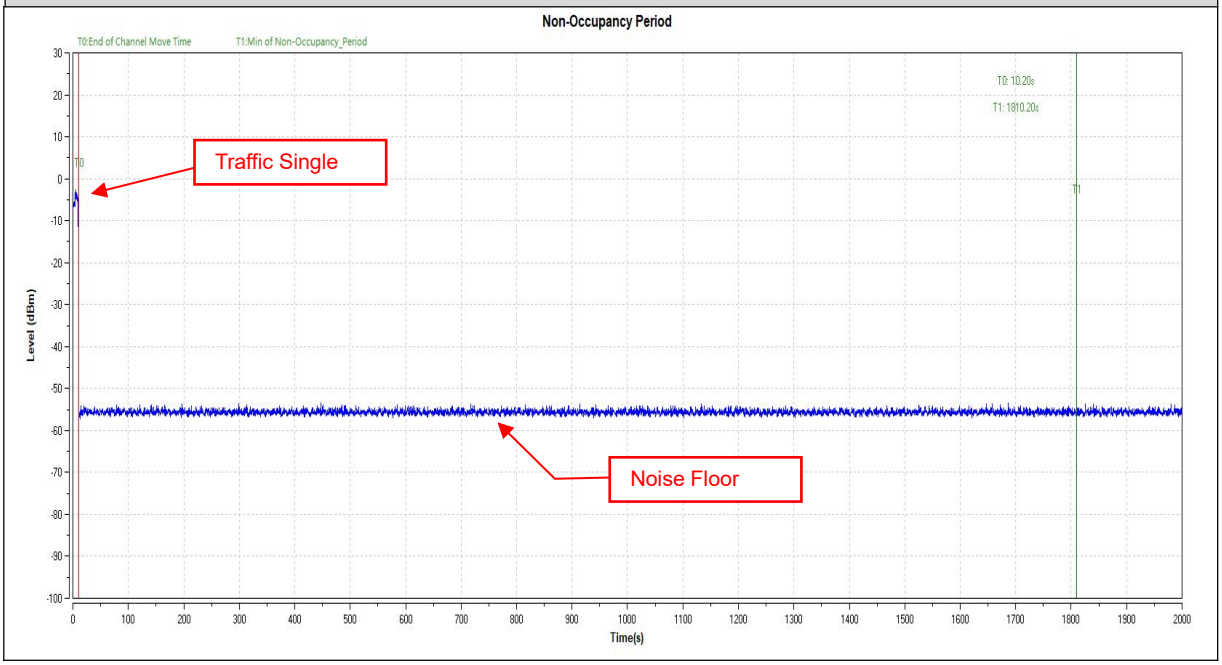

5 PHOTOGRAPHS OF THE EUT

Please refer to the attached file (External Photos report and Internal Photos).

------ End of the Report ------

Important

(1) The test report is invalid without the official stamp of CVC;

(2) Any part photocopies of the test report are forbidden without the written permission from CVC;

(3) The test report is invalid without the signatures of Approval and Reviewer;

(4) The test report is invalid if altered;

(5) Objections to the test report must be submitted to CVC within 15 days.

(6) Generally, commission test is responsible for the tested samples only.

(7) As for the test result "-" or "N" means "not applicable", "/" means "not test", "P" means "pass" and "F" means "fail"

The test data and test results given in this test report should only be used for purposes of scientific research, teaching and internal quality control when the CMA symbol is not presented.

Address: No. 1301, Guanguang Road, Xinlan Community, Guanlan Street, Longhua District, Shenzhen, Guangdong, 518110, P. R. China

Post Code：518110 Tel：0755-23763060-8805

Fax：0755-23763060 E-mail：sz-kf@cvc.org.cn

http://www.cvc.org.cn