MS-DC I DINO CHASERS

100lb Coated Stock Gloss Finish

CMYK | PMS 267 | DIE LINE

7.2 in X 4.4 in

This equipment has been tested and found to comply with the limits for a Class B digital device, pursuant to part 15 of the FCC Rules. These limits are designed to provide reasonable protection against harmful interference in a residential installation. This equipment generates, uses and can radiate radio frequency energy and, if not installed and used in accordance with the instructions, may cause harmful interference to radio communications. However, there is no guarantee that interference will not occur in a particular installation. If this equipment does cause harmful interference to radio or television reception, which can be determined by turning the equipment off and on, the user is encouraged to try to correct the interference by one or more of the following measures: —Reorient or relocate the receiving antenna. —Increase the separation between the equipment and receiver. —Connect the equipment into an outlet on a circuit different from that to which the receiver is connected. —Consult the dealer or an experienced radio/TV technician for help.

This device complies with part 15 of the FCC Rules. Operation is subject to the following two conditions: (1) This device may not cause harmful interference, and (2) this device must accept any interference received, including interference that may cause undesired operation. Any changes or modifications not expressly approved by the party responsible for compliance could void the user's authority to operate the equipment.

Conforms to ASTM-F963 & EN-71 Standards Remove all packing before giving this product to your child. Please retain details for future reference.

Manufactured for: Toyvation, LLC, 99 Wall Street #1324 New York, NY 10005 © 2023 All rights reserved. All names and logos are trademarks of MindSprout. Registered in the U.S. and other Countries. All rights reserved.

DESIGNED IN USA MADE IN CHINA

Produce name: Dino remote Car
ITEM#: MS-DC

Requires:
10 AA 1.5V Batteries LR6 (Not included)

LET'S GROW TOGETHER.

We develop young minds by creating fun, safe, and engaging products that stimulate children while entertaining them. We grow smiles by making toys that children want to play with, and that parents trust.

Thank you for putting your trust in us and in our toys.

Your friends,

The MindSprout Team

We'd love to hear from you. If you have any thoughts about how we can improve our products, we're listening.

Scan this code to start a WhatsApp chat, or email us at: info@mindsprouttoys.com

Product Includes

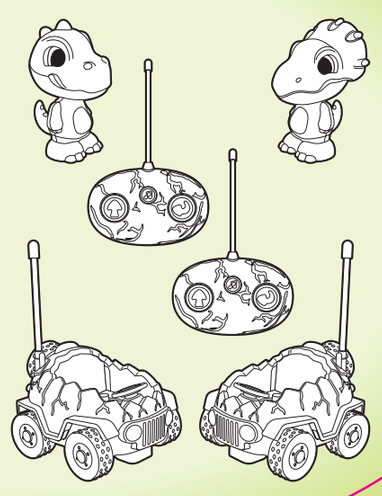

Battery Installation

Requires 10 AA Batteries

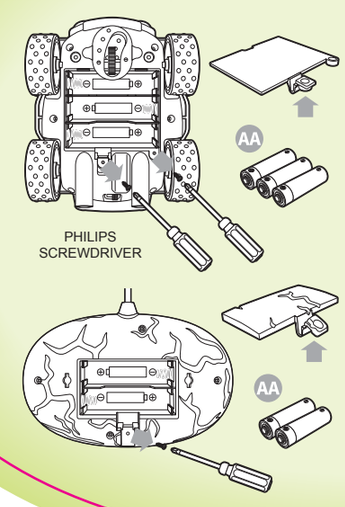
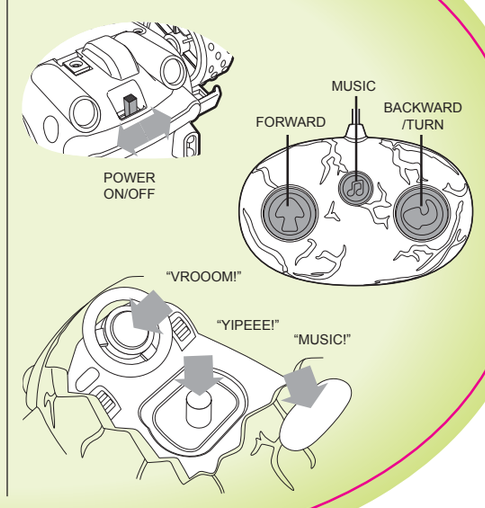
Operating the Car