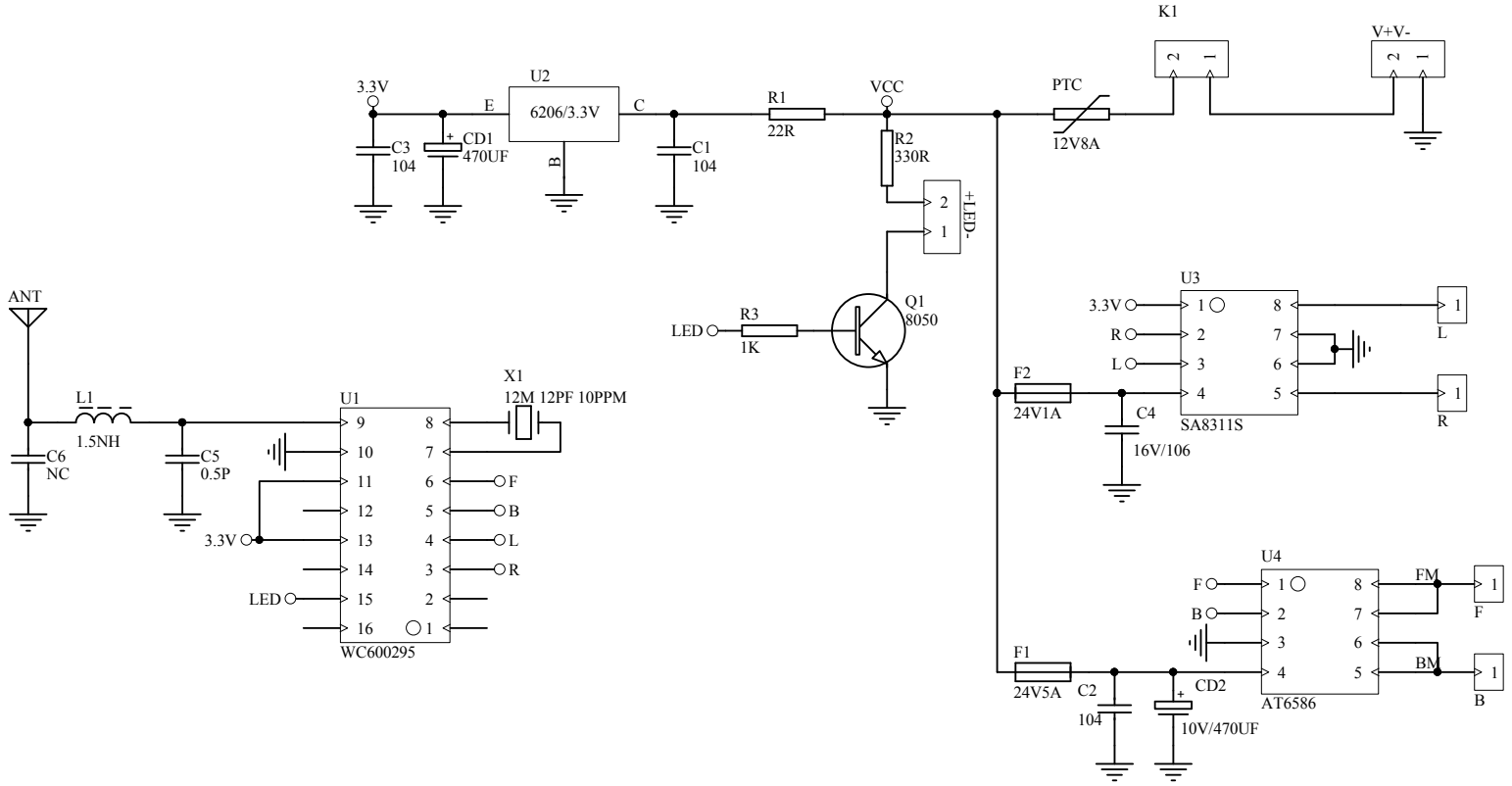

Title		
Size A4	Number	Revision
Date: 2024-08-04		Sheet of
File: E:\青艺玩具\WC600295		Drawn By: