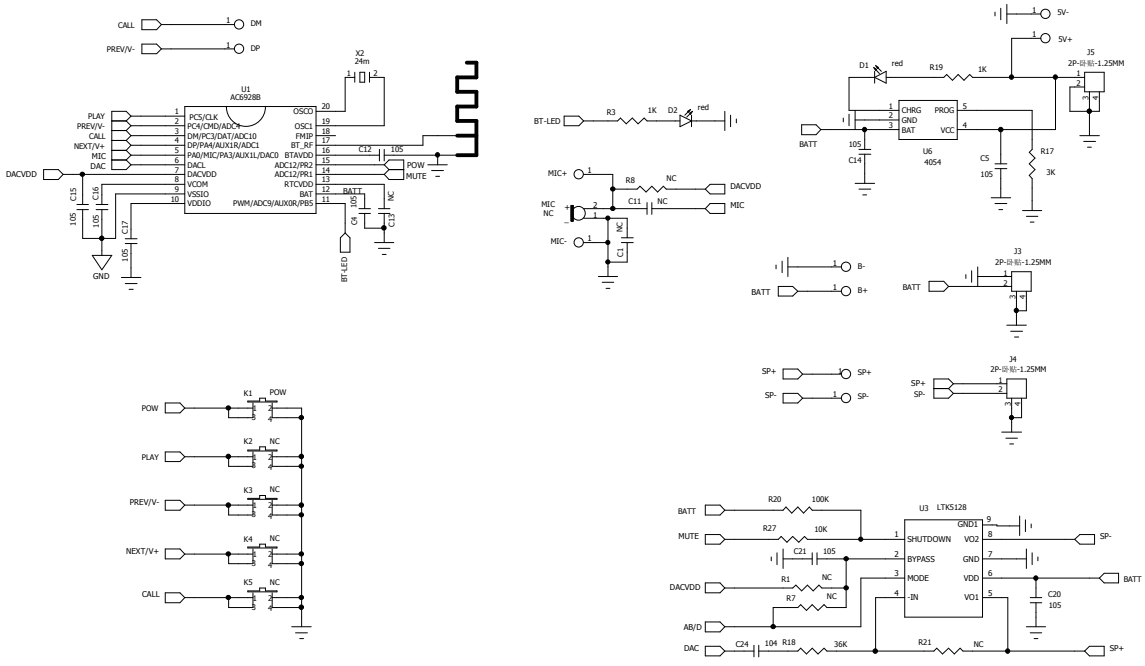

File name: 92CP-F26A	
Sheet name:	
Drawing No:	Version:V1.0
Drawn By:	Date:
Checked By:	Date:
Approved By:	Date:
Size: A3	Sheet: 1/1