| REVISIONS | | | | | |
|---|---|---|---|---|---|
| REV. | ECN# | ZONE | DESCRIPTION | CHANGED BY/DATE | APPROVED BY/DATE |
| F01 | | | INITIAL RELEASE | LCTAN 05OCT20 | TERENCE 05OCT20 |

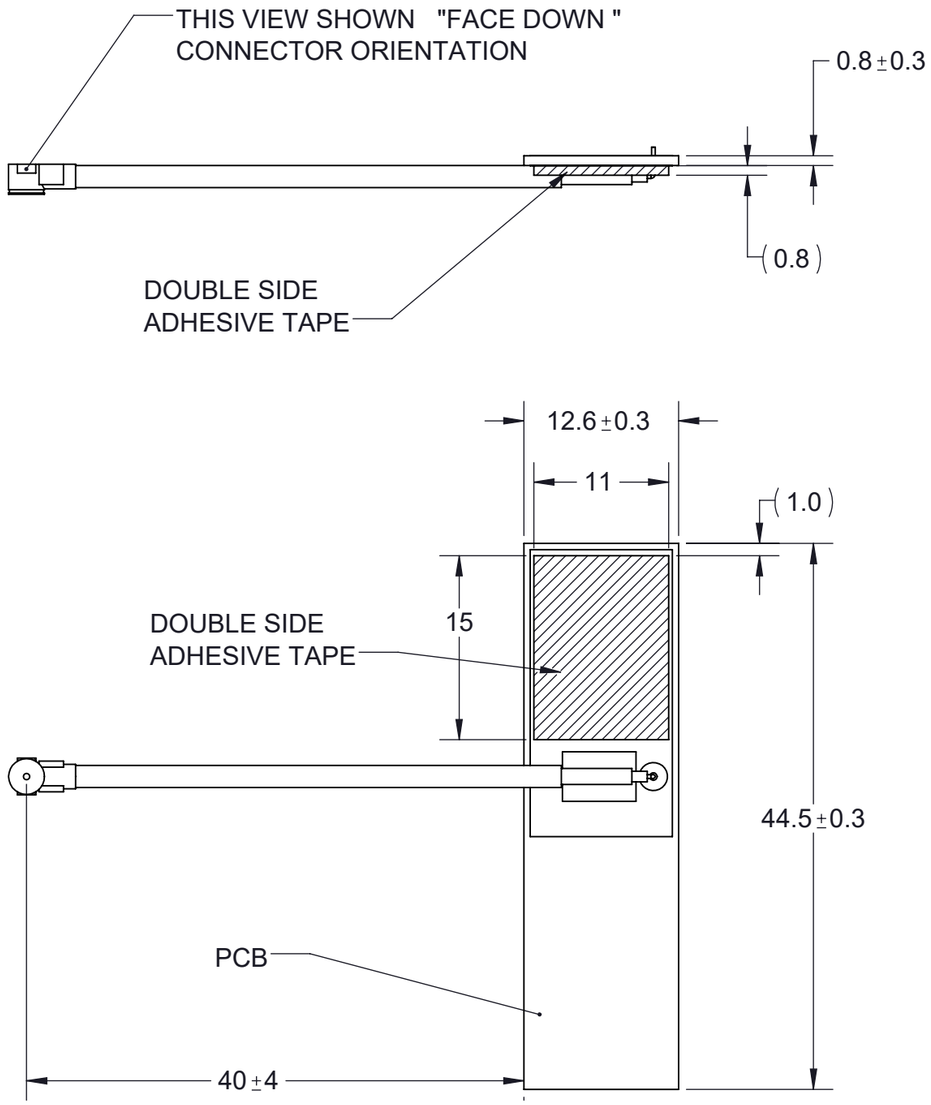


| PARAMETER | PERFORMANCE |
|---|---|
| MODEL NUMBER | EBL2400A2S-4MHF1 |
| ANTENNA TYPE | EMBEDDED DIPOLE ANTENNA NANOBLUE FAMILY |
| FREQUENCY, GHz | 2.4 to 2.5 |
| AVERAGE GAIN (*), dBi | 2.1 |
| IMPEDENCE, Ohm | 50 |
| AVERAGE EFFICIENCY (*),% | 72 |
| VSWR (*) | < 2.0: 1 |
| POLARIZATION | VERTICAL |
| RADIATION PATTERN | OMNIDIRECTIONAL |
| PCB SIZE (W x L x T),mm | 12.6 x 44.5 x 0.8 |
| CABLE TYPE | Ø 1.13 COAX CABLE |
| CONNECTOR | IPEX MHF1 |
| TOTAL CABLE LENGTH,Lc,mm | 40 ± 4 |
| RoHS COMPLIANCE | YES |

- (*) NOTE: THIS PARAMETER IS DEVICE DEPENDANT AND SHOULD SERVE AS REFERENCE.
- THIS SPECIFICATION IS BASED ON THE TEST CONDITION ON A PC PLASTIC THICKNESS OF 1.8MM

**MATERIAL:**

**FINISH:**

| APPROVALS | | DATE |
|---|---|---|
| DRAWN BY | LCTAN | 05OCT20 |
| ELEC. ENG. | ZAINI | 05OCT20 |
| MECH. ENG. | WT NG | 05OCT20 |
| MFG./OPS. | GL YEAP | 05OCT20 |

THIRD ANGLE PROJECTION

DO NOT SCALE DRAWING

INTERPRET DIMENSIONING AND TOLERANCING IN ACCORDANCE WITH ASME Y14.5M-2009

**TOLERANCES UNLESS OTHERWISE SPECIFIED**

DIMENSIONS ARE IN MILLIMETERS

ANGLE: ±30'
0 PLACE DECIMAL: ±0.5
1 PLACE DECIMAL: ±0.25
2 PLACE DECIMAL: ±0.13

SURFACE ROUGHNESS 1.6

Laird CONNECTIVITY
PENANG, MALAYSIA

TITLE:
EBL2400A2S-4MHF1
MOUNTING & OUTLINE

| SIZE | DWG. NO. | REV |
|---|---|---|
| A3 | EBL2400A2S-4MHF1MO | F01 |

SCALE: 2:1 | PREVIOUS# ERROR!:Old Number | SHEET 1 OF 1

UNLESS OTHERWISE NOTED, THIS DOCUMENT CONTAINS LAIRD CONNECTIVITY CONFIDENTIAL INFORMATION. REPRODUCTION, USE, DISCLOSURE OR TRANSMITTAL OF ALL OR ANY PART OF THIS DOCUMENT IS PROHIBITED EXCEPT TO THE EXTENT APPROVED IN WRITING BY AN AUTHORIZED REPRESENTATIVE OF LAIRD CONNECTIVITY. LAIRD CONNECTIVITY RESERVES ALL RIGHTS UNDER PATENTS, TRADEMARKS, COPY RIGHTS AND TRADE SECRETS. COPYRIGHT, LAIRD CONNECTIVITY 2020, ALL RIGHTS RESERVED.