Back

3.5 in

5 in

WARNING - AVERTISSEMENT

This device is not a toy and should be kept away from children. Cet appareil n'est pas un jouet et doit être tenu hors de la portée des enfants.

Do not use the device in humid environments or in extremely hot / cold temperatures. N'utilisez pas l'appareil dans des environnements humides ou à des températures extrêmement chaudes / froides.

The warranty is invalid if the product has metal rust, water damage, or other natural oxidation. La garantie est invalide si le produit présente de la rouille métallique, des dégâts d'eau ou une autre oxydation naturelle.

Changes or modifications not expressly approved by the party responsible for compliance could void the user's authority to operate this device.

This device complies with part 15 of the FCC Rules. Operation is subject to the following two conditions: (1) This device may not cause harmful interference, and (2) this device must accept any interference received, including interference that may cause undesired operation.

NOTE: This equipment has been tested and found to comply with the limits for a Class B digital device, pursuant to part 15 of the FCC Rules. These limits are designed to provide reasonable protection against harmful interference in a residential installation. This equipment generates, uses, and can radiate radio frequency energy and, if not installed and used in accordance with the instructions, may cause harmful interference to radio communications. However, there is no guarantee that interference will not occur in a particular installation. If this equipment does cause harmful interference to radio or television reception, which can be determined by turning the equipment off and on, the user is encouraged to try to correct the interference by one or more of the following measures:

- Reorient or relocate the receiving antenna.
- Increase the separation between the equipment and receiver.
- Connect the equipment into an outlet on a circuit different from that to which the receiver is connected.
- Consult the dealer or an experienced radio/TV technician for help.

FCC Radiation Exposure Statement

This equipment complies with FCC radiation exposure limits set forth for an uncontrolled environment. This equipment should be installed and operated with minimum distance of 20 cm between the radiator and your body. This transmitter must not be co-located or operating in conjunction with any other antenna or transmitter.

WARRANTY - GARANTIE

This product has a 1 year warranty against defects in manufacturing under regular consumer use. For instructions about how to obtain warranty service for your product, please contact Customer Service: info@primebrandsgroup.com.

Ce produit a une garantie d'un an contre les défauts de fabrication dans le cadre d'une utilisation régulière par les consommateurs. Pour savoir comment obtenir un service de garantie pour votre produit, veuillez contacter le service à la clientèle : info@primebrandsgroup.com.

©2023 Prime Brands Group. All rights reserved. All trade names are registered trademarks of the respective manufactures listed. Made in China. ©2023 Prime Brands Group. Tous droits réservés. Tous les noms commerciaux sont des marques de commerce enregistrées des manufacturiers respectifs identifiés. Fabriqué en Chine.

Prime Brands Group • Brooklyn, NY 11232 • www.soarspaces.com

PRIME BRANDS GROUP

Front

3.5 in

5 in

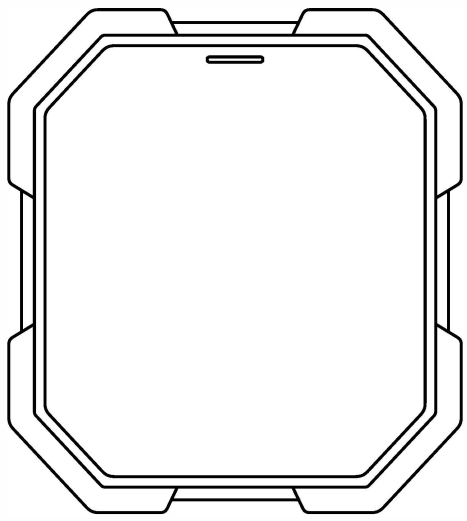

wireless Charging Pad

User Manual - Manuel de l'utilisateur

Inside

5 in

Thank you for purchasing the WCP5 Wireless Charging Pad. Just plug in the charger, place your phone on the charging pad, and it starts charging automatically. Merci d'avoir acheté le socle de recharge sans fil DEL WCP5. Branchez simplement le chargeur, placez votre téléphone sur le socle de recharge et le chargement se fait automatiquement.

Includes: Wireless charger, USB charging cable, user manual. / Comprend : Chargeur sans fil, câble de recharge USB, manuel de l'utilisateur

PRODUCT KEY - CLÉ DE PRODUIT

1. Wireless Charging Area / Zone de recharge sans fil
2. LED Lights / Lumières DEL
3. Type-C Charging Port / Port de recharge type-C

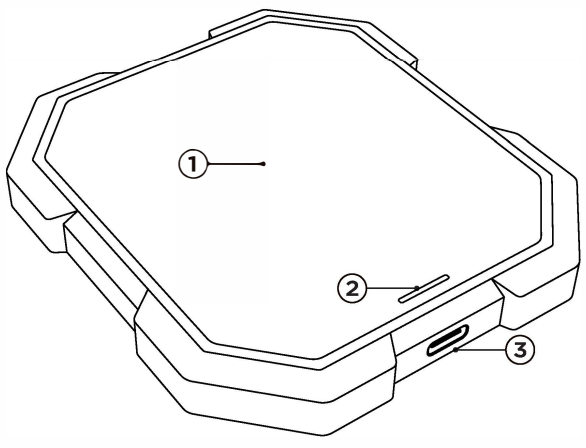

SPECIFICATIONS - SPÉCIFICATIONS

Micro Input - Micro entrée	5V/2A 9V/2A
Wireless Power - Alimentation sans fil	15W/10W/7.5W/5W
Charging Efficiency - Efficacité de recharge	≥73%
Charging Distance - Distance de recharge	≤6mm

CONNECTING - CONNEXION

1 - Connect one end of the included charging cable to the wirelesscharging pad. Branchez un bout du câble de recharge inclus dans le socle de charge.

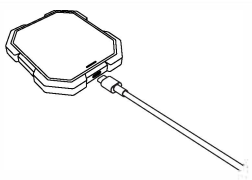

2 - Connect the other end of the charging cable to a wall adaptor or other suitable 5V power source. The red light will turn on when power is connected. Branchez l'autre bout du câble de recharge dans un adaptateur mural ou une autre source d'alimentation 5V convenable. La lumière rouge s'allumera quand l'alimentation est branchée.

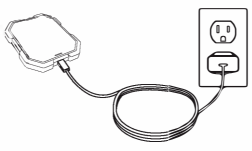
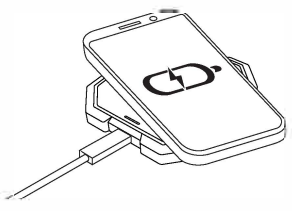
3 - Place your smart phone or wireless charging enabled device on top of the charging pad. The RGB light will change the color to indicate the phone is charging. Placez votre téléphone intelligent ou votre appareil sans fil devant être rechargé sur le dessus du socle de recharge. La lumière RVB changera de couleur pour indiquer que le téléphone est en recharge.