NO.	DESCRIPTION / PART NO.	Q'ty	REMARKS

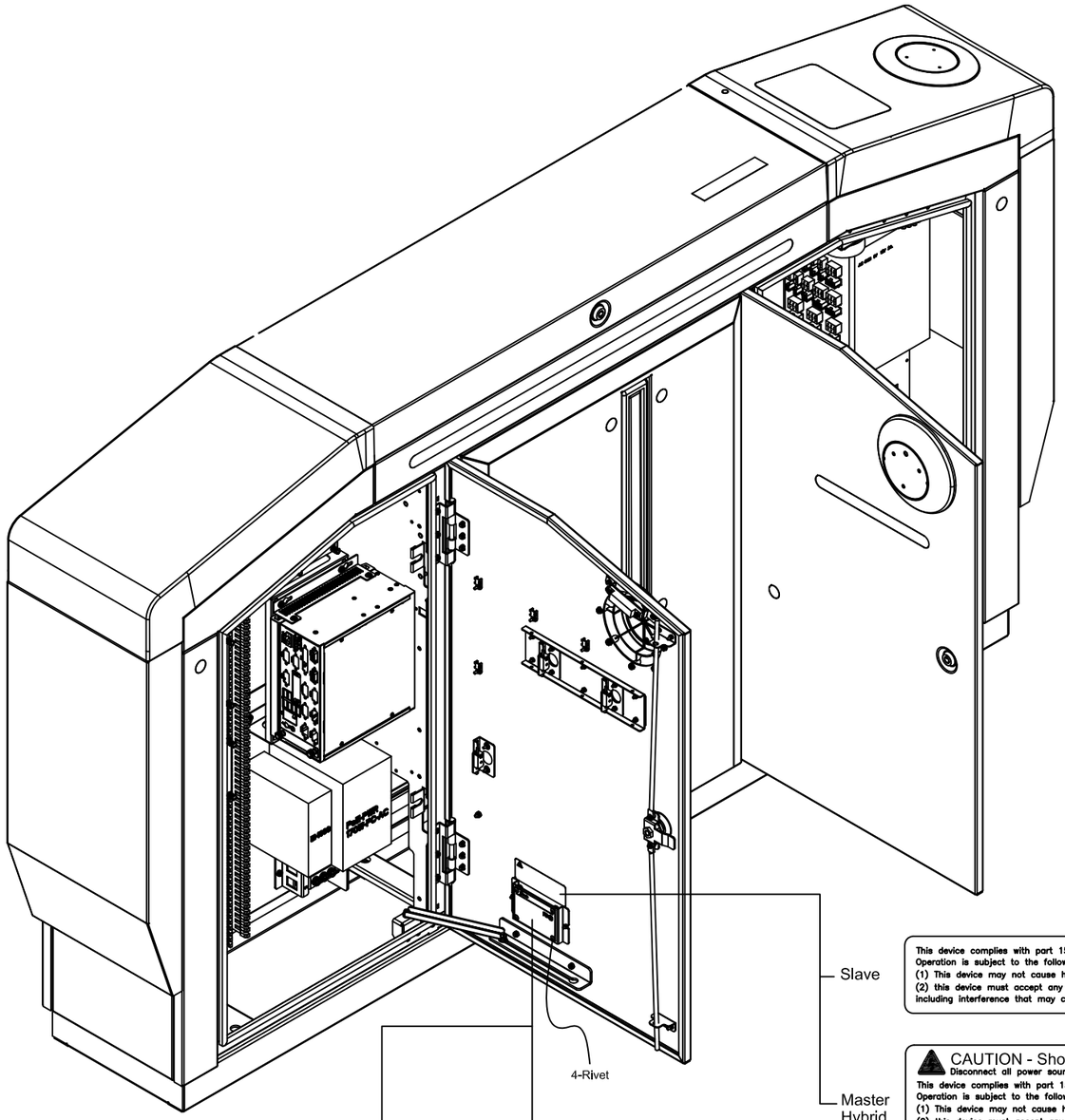

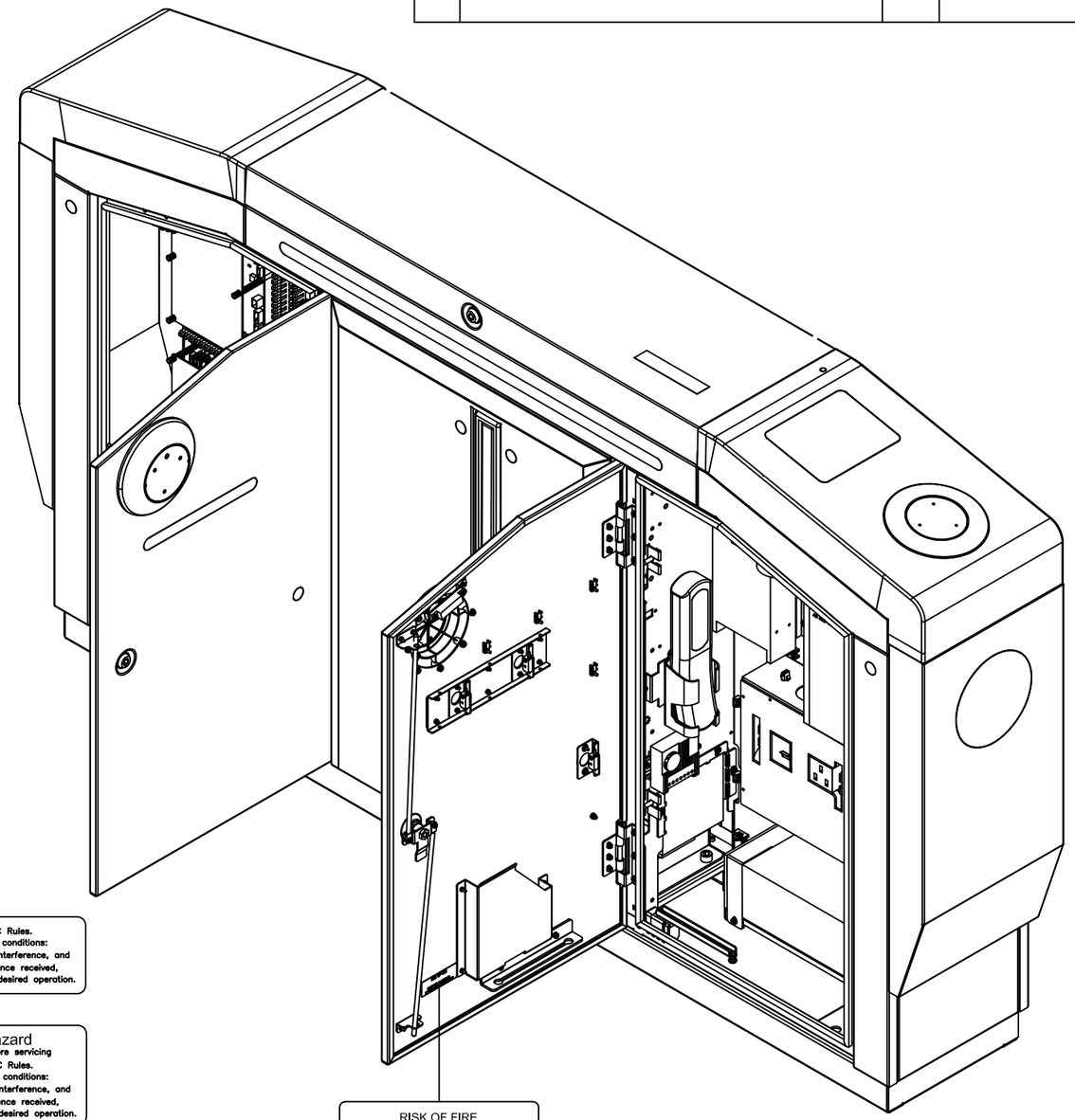

This device complies with part 15 of FCC Rules.
Operation is subject to the following two conditions:
(1) This device may not cause harmful interference, and
(2) this device must accept any interference received,
including interference that may cause undesired operation.

CAUTION - Shock Hazard
Disconnect all power sources before servicing
This device complies with part 15 of FCC Rules.
Operation is subject to the following two conditions:
(1) This device may not cause harmful interference, and
(2) this device must accept any interference received,
including interference that may cause undesired operation.

RISK OF FIRE

Install only on concrete
or other non-combustible floor

All Cabinet

STraffic America LLC
PRODUCT NAME : FAREGATE
MODEL NUMBER : SA-20WE0c
MANUFACTURER : STrafffic America LLC
INPUT :
DATE : 2020.
SERIAL NUMBER : 20GH-206-0001
FCC ID : 2AXRQWFAG
Contains RF Module FCC ID: LVCTR4
MADE IN USA

SLAVE

STraffic America LLC
PRODUCT NAME : FAREGATE
MODEL NUMBER : SA-20WBa0
MANUFACTURER : STraffic America LLC
INPUT : 120VAC / 8A / 60Hz
DATE : 2020.
SERIAL NUMBER : 20GA-206-0001
FCC ID : 2AXRQWFAG
Contains RF Module FCC ID: LVCTR4
MADE IN USA

MASTER / HYBRID

REV NO.	DESCRIPTION	DRAWN	CHECKED	APPROVED
3				
2				
1				
0	ISSUE FOR CLIENT APPOVAL			

DIMENSIONAL TOLERANCE

GRADE \ DIM	4 ≀	5 ≀ 12	13 ≀ 36	37 ≀ 110	111 ≀ 330	331 ≀ 1000	1000 ≀
1	0.10	0.10	0.20	0.20	0.30	0.5	1.0
2	0.15	0.20	0.30	0.45	0.70	1.0	1.5
3	0.20	0.30	0.45	0.70	1.0	1.5	2.0
4	0.30	0.45	0.70	1.0	1.5	2.0	3.0
5	0.45	0.70	1.0	1.5	2.0	3.0	4.0
ANGULAR							0

UNLESS OTHERWISE SPECIFIED

APPROVALS		DATE
DRAWN	SANGHEE.YOON	11/07/2020
CHECKED	KIHYUN.KIM	11/07/2020
APPROVED	HUNHO.CHO	11/07/2020

TREATMENT/FINISH

VIEW

UNIT mm inch

FRACTIONS ± DECIMALS .XX= .XXX= ANGLES ±

STraffic America

TITLE Configration of Label

MATERIAL

Ref.

SIZE A1 | CONTRACT NO. FQ18152 | DWG NO. HM-TM-000000

SCALE 1:1 | Rev. 0 | SHEET 1/1

(A1 : 841X594)