SCH

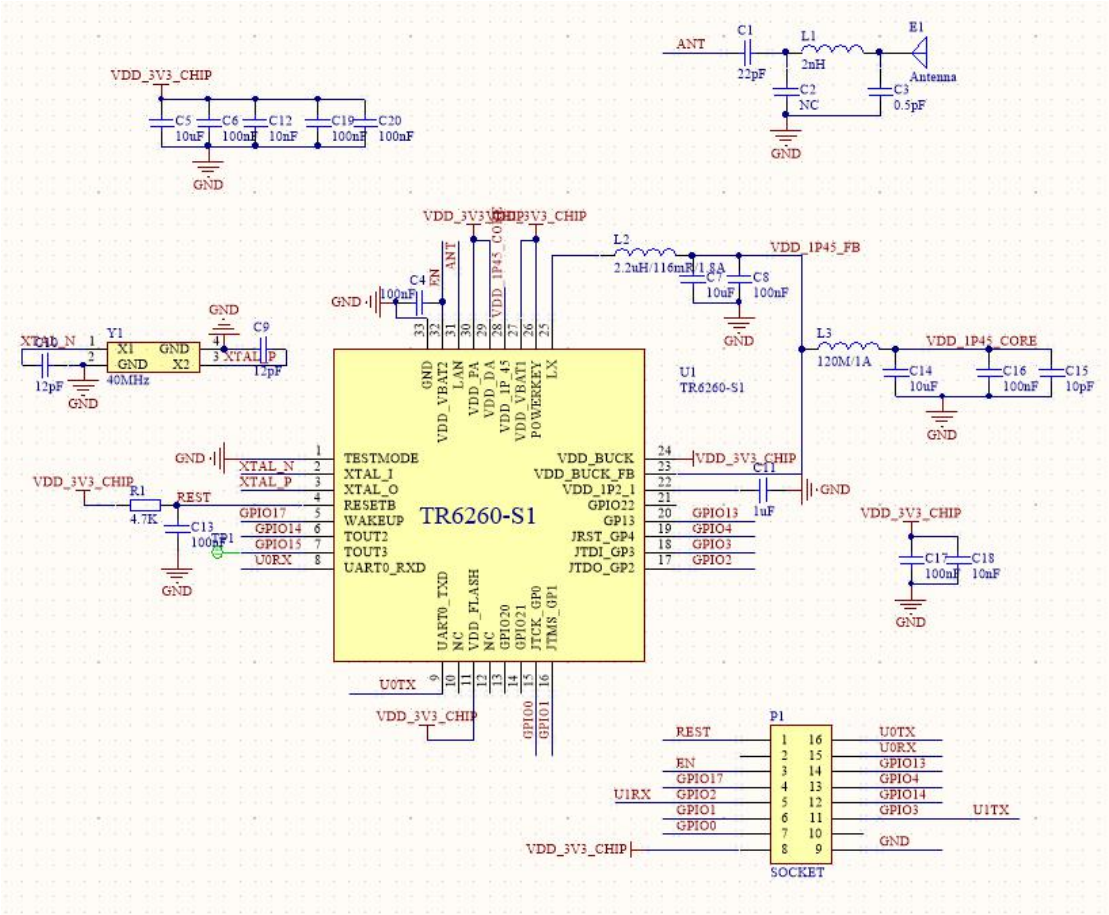
VDD_3V3_CHIP
C5 10uF
C6 100nF
C12 10nF
C19 100nF
C20 100nF
GND
ANT
C1 22pF
L1 2nH
E1
Antenna
C2 NC
C3 0.5pF
L2 2.2uH/116mA
VDD_1P45_FB
C7 10uF
C8 100nF
C4 100nF
EN
VDD_1P45_CORE
L3 120M/1A
C14 10uF
C16 100nF
C15 10pF
XTAL_N
XTAL_P
Y1 40MHz
X1
X2
C9 12pF
12pF
U1
TR6260-S1
TESTMODE
XTAL_I
XTAL_O
RESETB
WAKEUP
TOUT2
TOUT3
UART0_RXD
VDD_BUCK
VDD_BUCK_FB
VDD_1P2_1
GPIO22
GP13
JRST_GP4
JTDI_GP3
JTDO_GP2
GPIO13
GPIO4
GPIO3
GPIO2
GPIO17
GPIO14
GPIO15
U0RX
U0TX
UART0_TXD
VDD_FLASH
GPIO20
GPIO21
JTCK_GP0
JTMS_GP1
GPIO0
GPIO1
R1 4.7K
REST
C13 100nF
C11 1uF
C17 100nF
C18 10nF
P1
SOCKET
U1RX
U1TX