SPECIFICATION

SHEET FOR APPROVAL

（Revision：R：A1）

	CUSTOMER(客户名称)	北京可以	
	CS P/N(客户机种)	brain	TB01
	PART NAME(品名)	WIFI Antenna	
	FREQUENCY(频率)	2400~2500MHz+5150~5850MHz	
	ZTX NO.(物料编号)	K.00000013	
	DATE(日期)	2022-09-29	

CUSTOMER			
QA CHECKED	ME CHECKED	RF CHECKED	MANAGER CHECKED

Remark(备注)：

Sign(客户确认签字盖章)： _____

MANAGER CHECKED	MANAGER CHECKED	ME CHECKED	RF CHECKED	LISTER
		NINGPING LAI	JIANENG FENG	

深圳市中天迅通信技术股份有限公司
SHENZHEN ZHONGTIAN XUN Communication Technology Co.,Ltd.

地址：深圳市宝安区石岩镇石龙大道34号(腾达工业园)　邮编：518000

电话：0755-27588320　传真：0755-27588045 http://www.chinaztx.com

Revision history

Edition	date	state
A1	2022-09-29	The first edition

Index

		Revision history	1
		Index	2
1		Mechanical Specification	3
	1-1	Mechanical Specification	3
2		Test equipment	4
3		Test Results Surmmary	5
	3-1	Active Test	5
	3-2	VSWR	5
	3-3	Passive Test	6
	3-4	2D/3D Radiation Pattern Results	6~8
	3-5	Environment treatment	8

1. Mechanical Specification

1-1 Mechanical Configuration

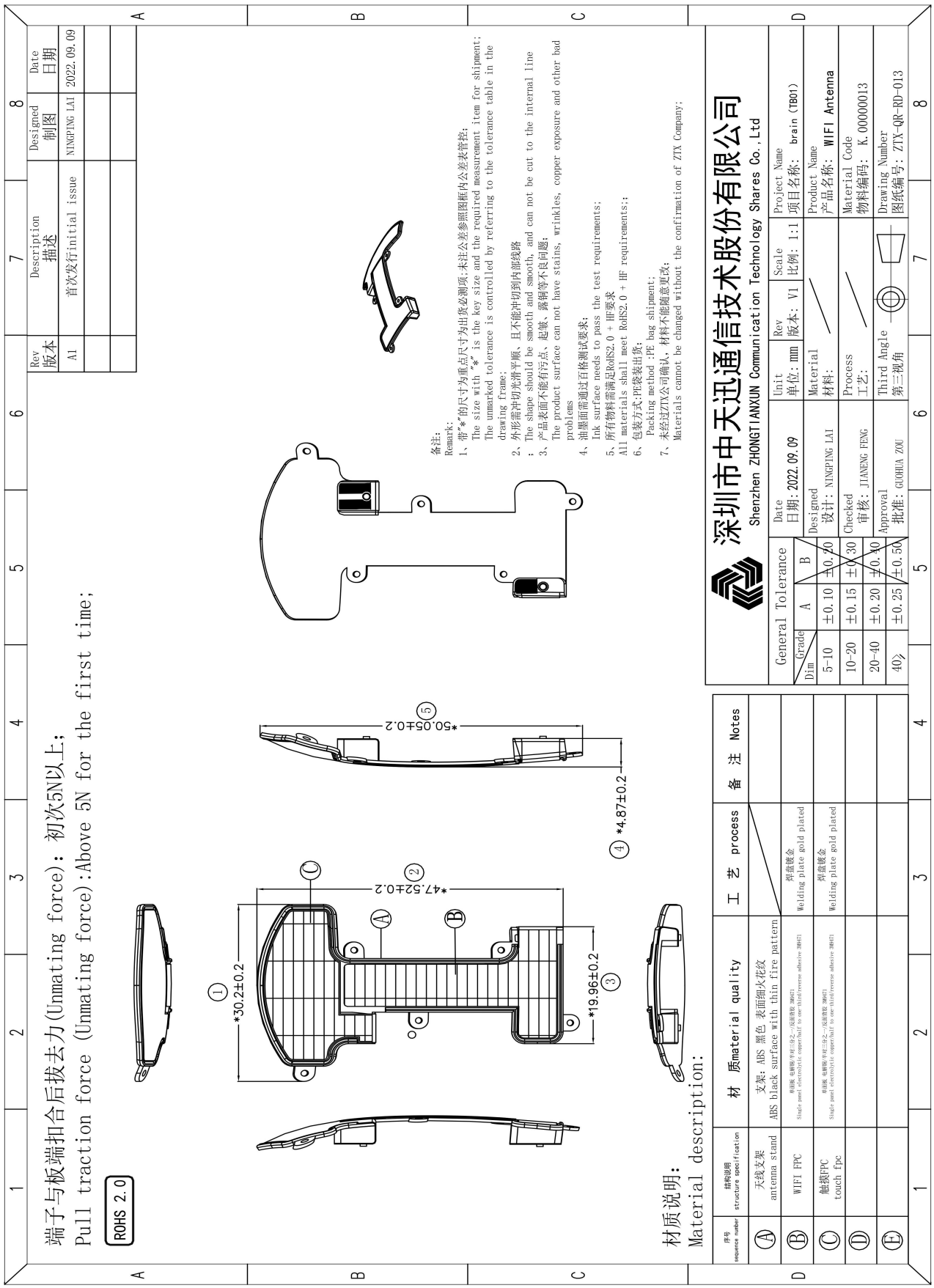

2.Test equipment

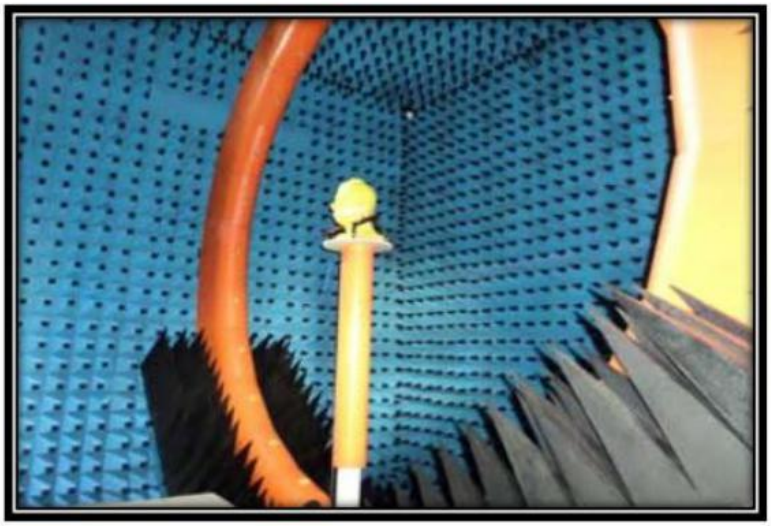

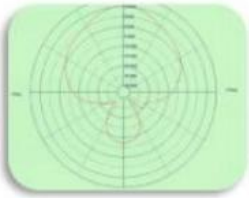

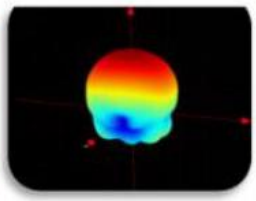

Owned 6 microwave dark room, equipped 2 sets world leading France Satimo SG24 OTA certification test systems（one in SHENZHEN, another one in Shanghai）, ETS OTA Standard test system，Blue test reverberation test system which is High repeatability, high accuracy and high resolution. It can quickly provide accurate test reports, fully meet the CTIA standards.

Testing range:

Support active, passive testing of GSM/CDMA/WCDMA/TD-SCDMA/LTE/WIFI/WLAN/WiMax/BT /GPS/MIMO/UWB within0.4-6G.

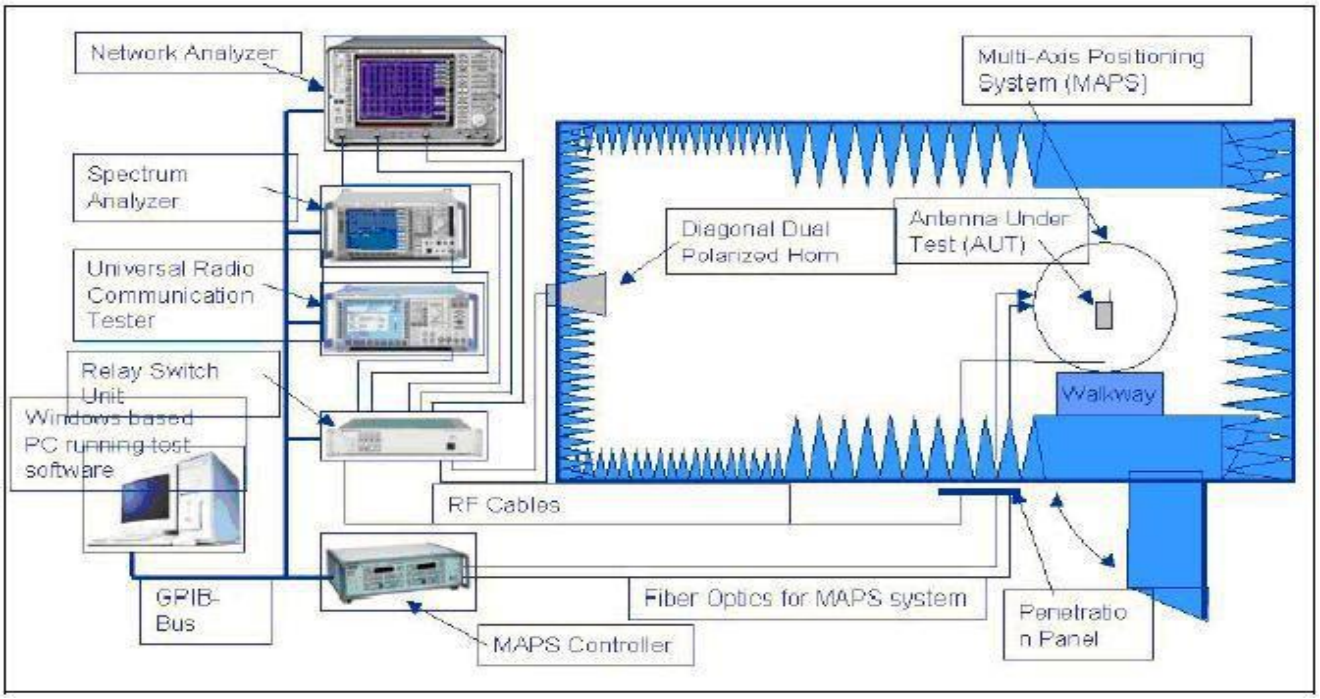

3.Test Results Surmmary

3-1 Active Test

2. 4G

WIFI B	
1	15. 64/-81. 04
7	14. 24/-79. 83
13	14. 56/-79. 69
WIFI G	
1	16. 93/-68. 42
7	14. 95/-66. 66
13	14. 56/-79. 69
WIFI N	
1	16. 44/-65. 61
7	15. 43/-64. 67
13	14. 53/-65. 54

5G

WIFI A	
44	10. 44/-71. 68
149	11. 66/-72. 01
161	10. 64/-71. 08

3-2 VSWR

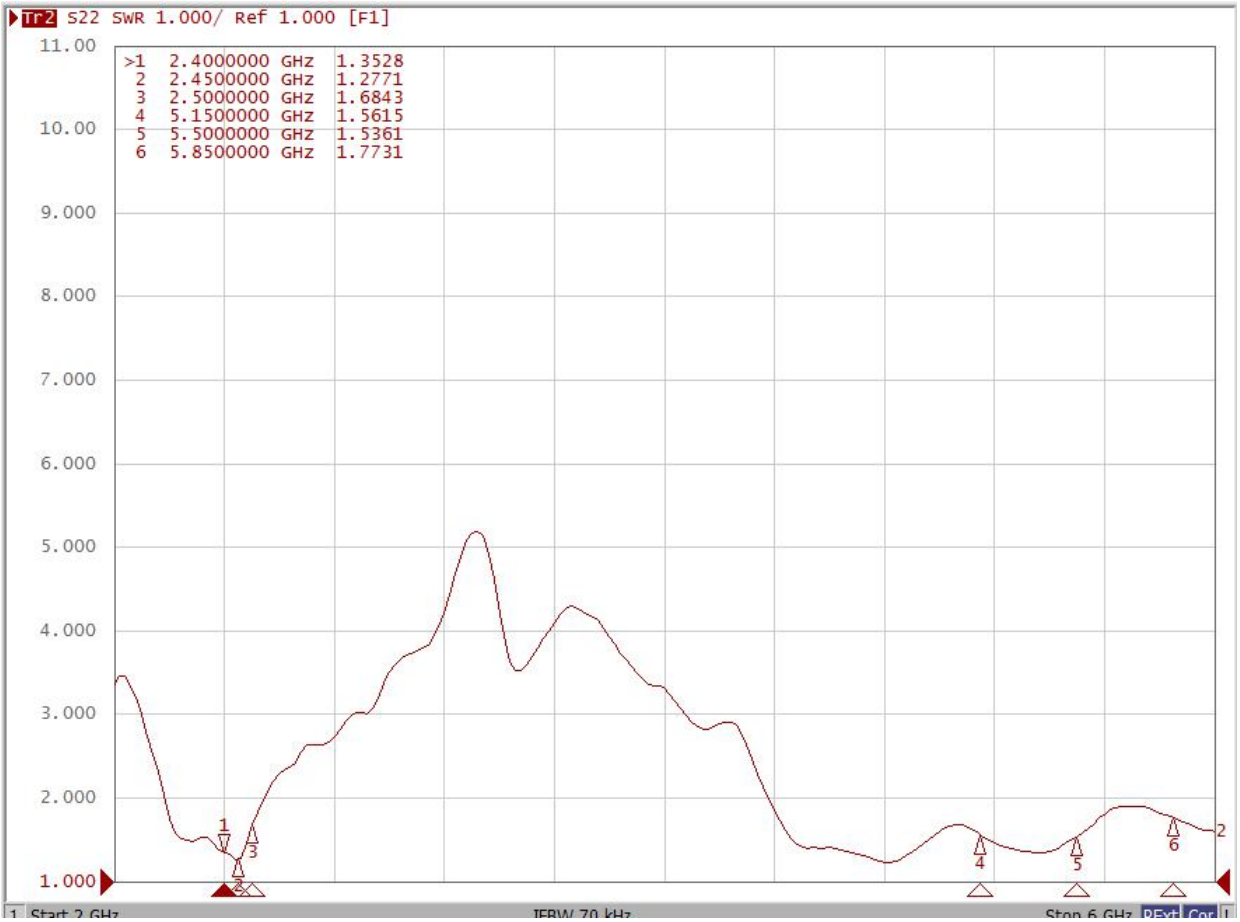

3-3 Passive Test

Frequency (MHz)	2400	2450	2500	5150	5500	5850
Efficiency (%)	60%	60%	58%	50%	50%	50%
Gain (dBi)	2.17	2.25	2.33	4.15	4.28	4.33

3-4 2D/3D Radiation Pattern Results

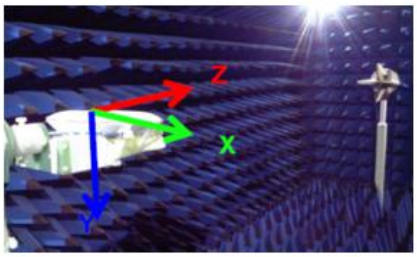

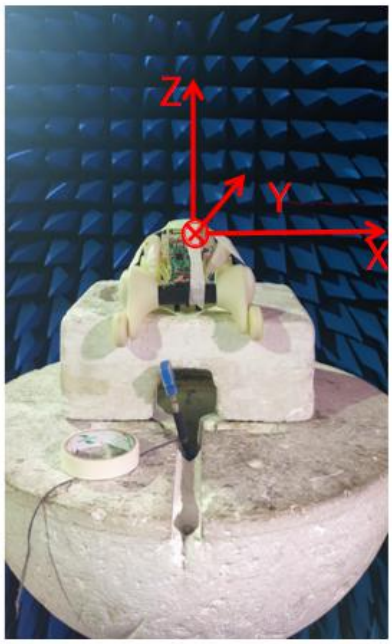

Measurement orientation

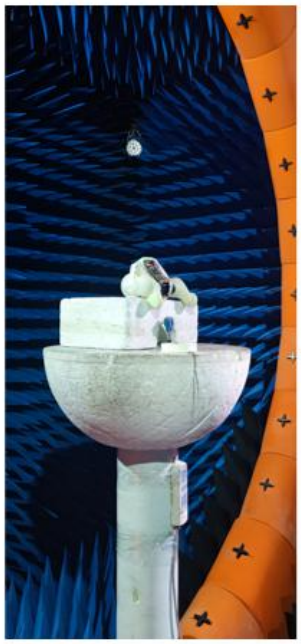

Antenna location

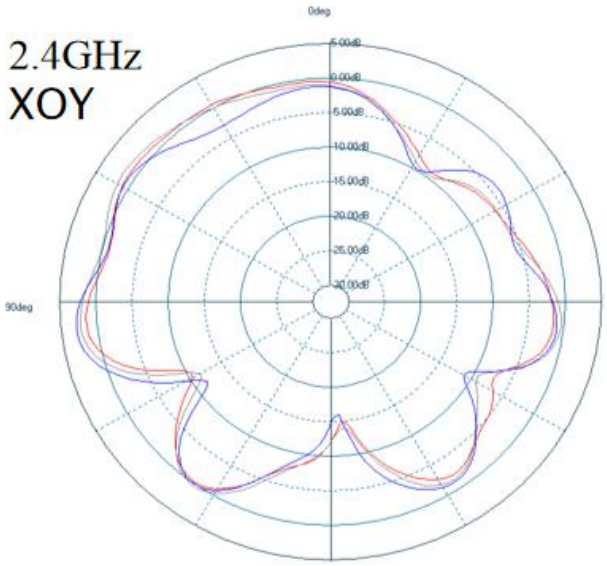
2.4GHz
XOY
0deg
90deg
270deg
180deg

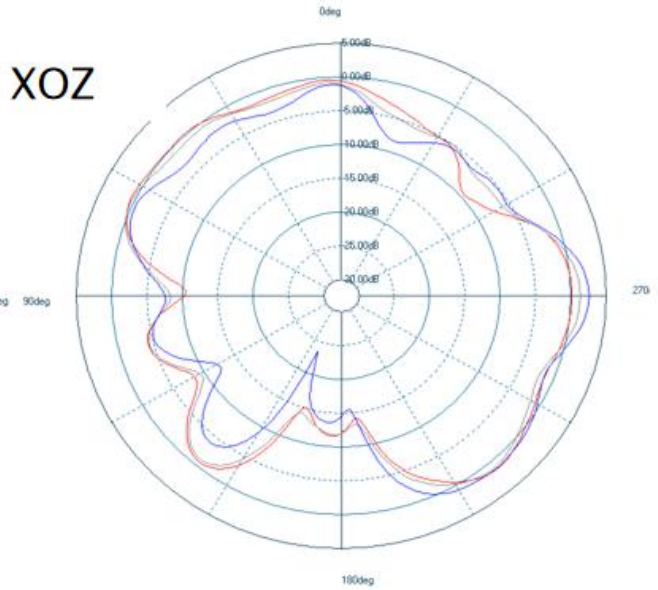
XOZ
0deg
90deg
270
180deg

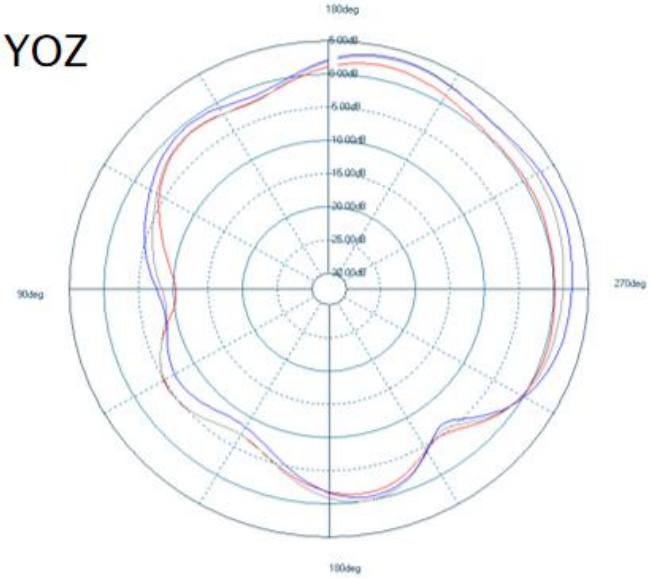
YOZ
90deg
270deg
180deg

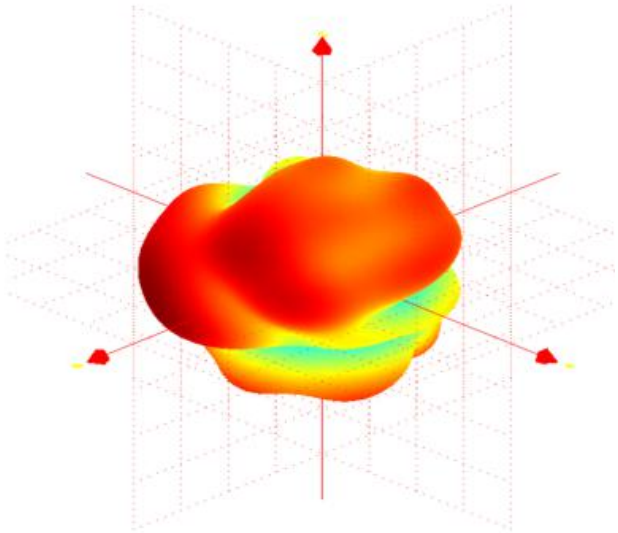

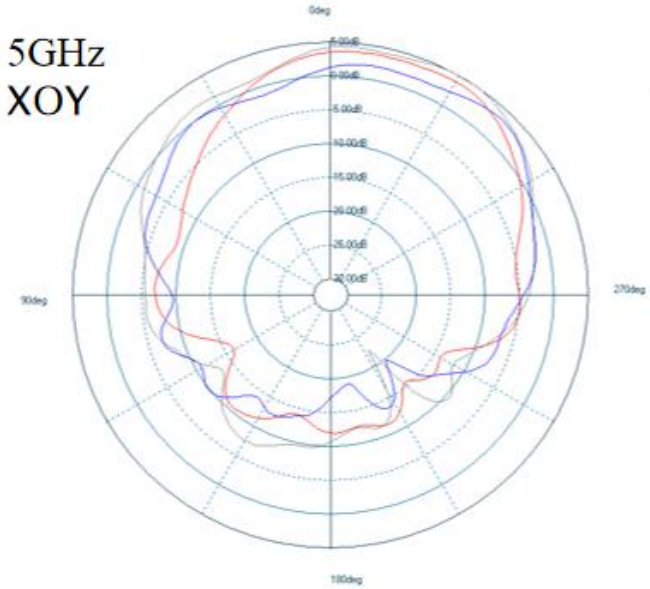

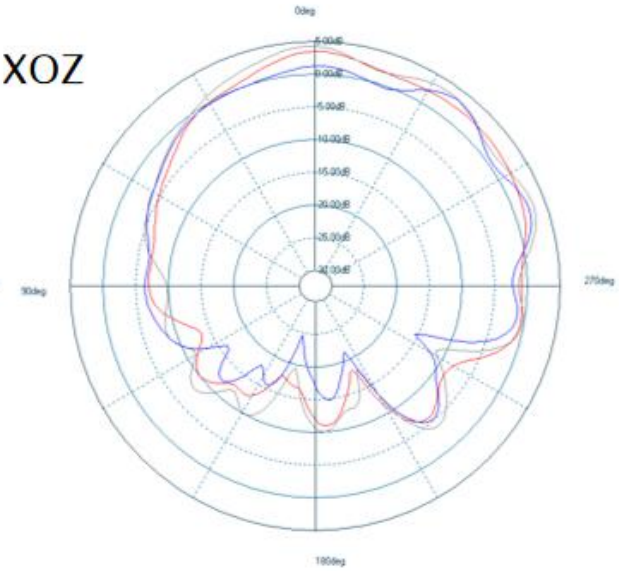

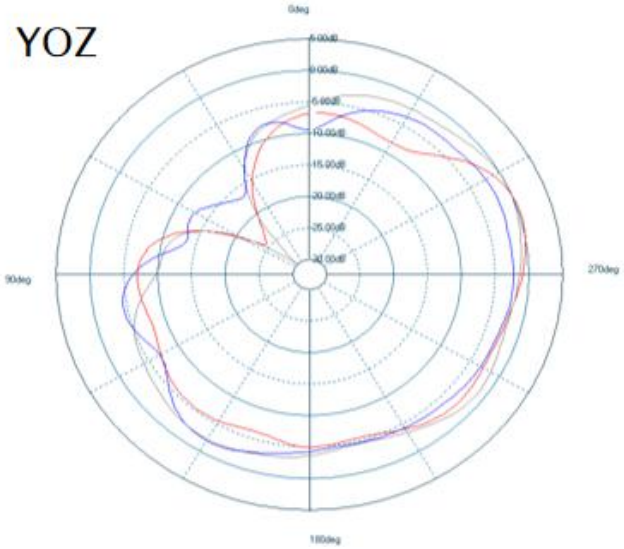

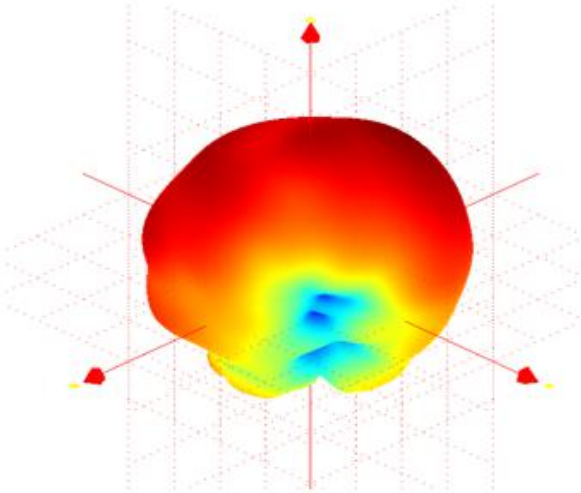

3-5 Environment treatment
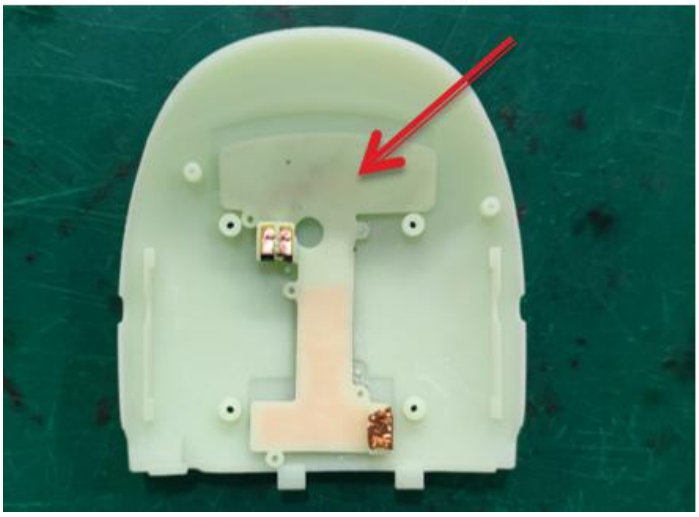
Antenna sticking position