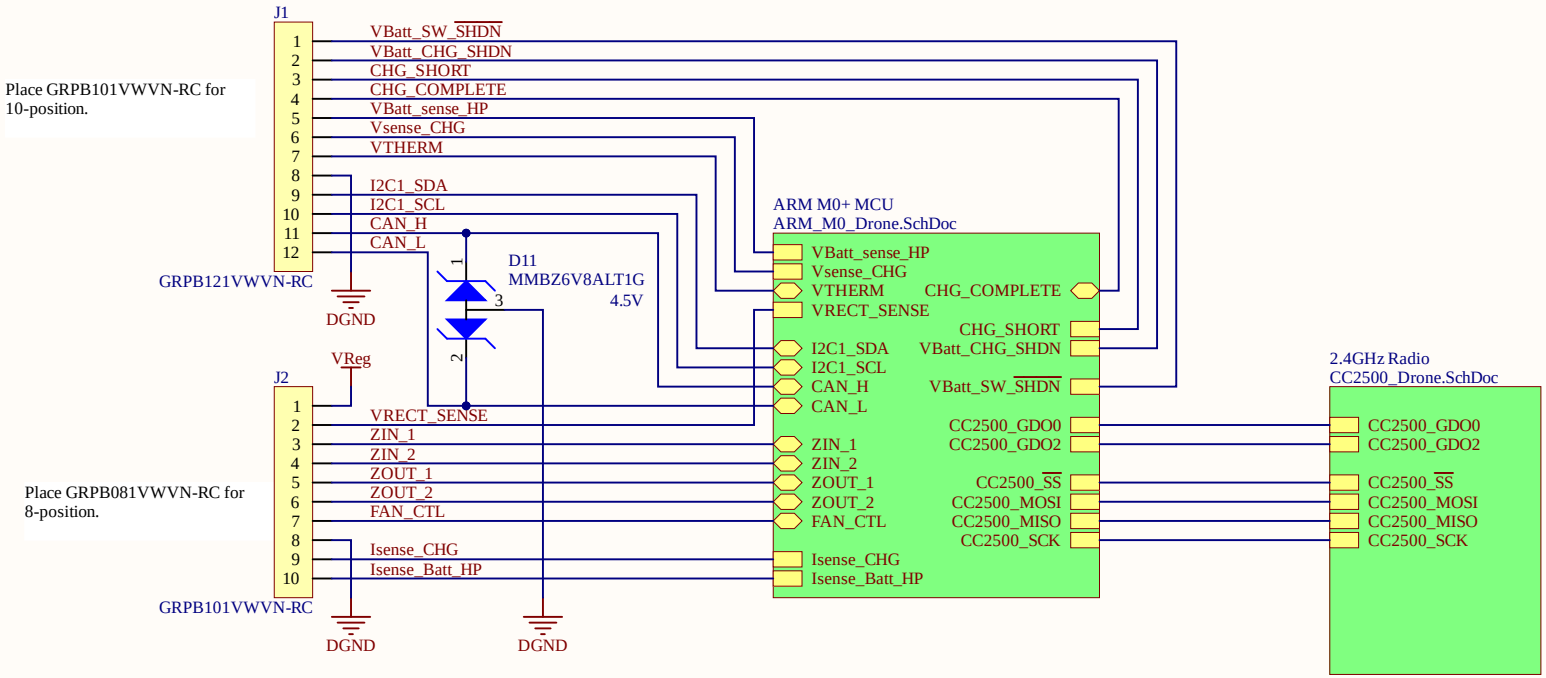

Title	**Mobile Digital**		
Size: A	Number: 213-000014	Revision: A	
Date: 6/11/2024	Time: 3:45:45 PM	Sheet 1 of 3	
File: C:\Users\Patrick\Documents\Projects\pcb_arm_m0_rx\TopLevel_ARM_M0_Digital.SchDoc			

WiBotic Inc.
9706 4th Ave NE
Suite 208
Seattle, WA 98115
USA

WIBOTIC™

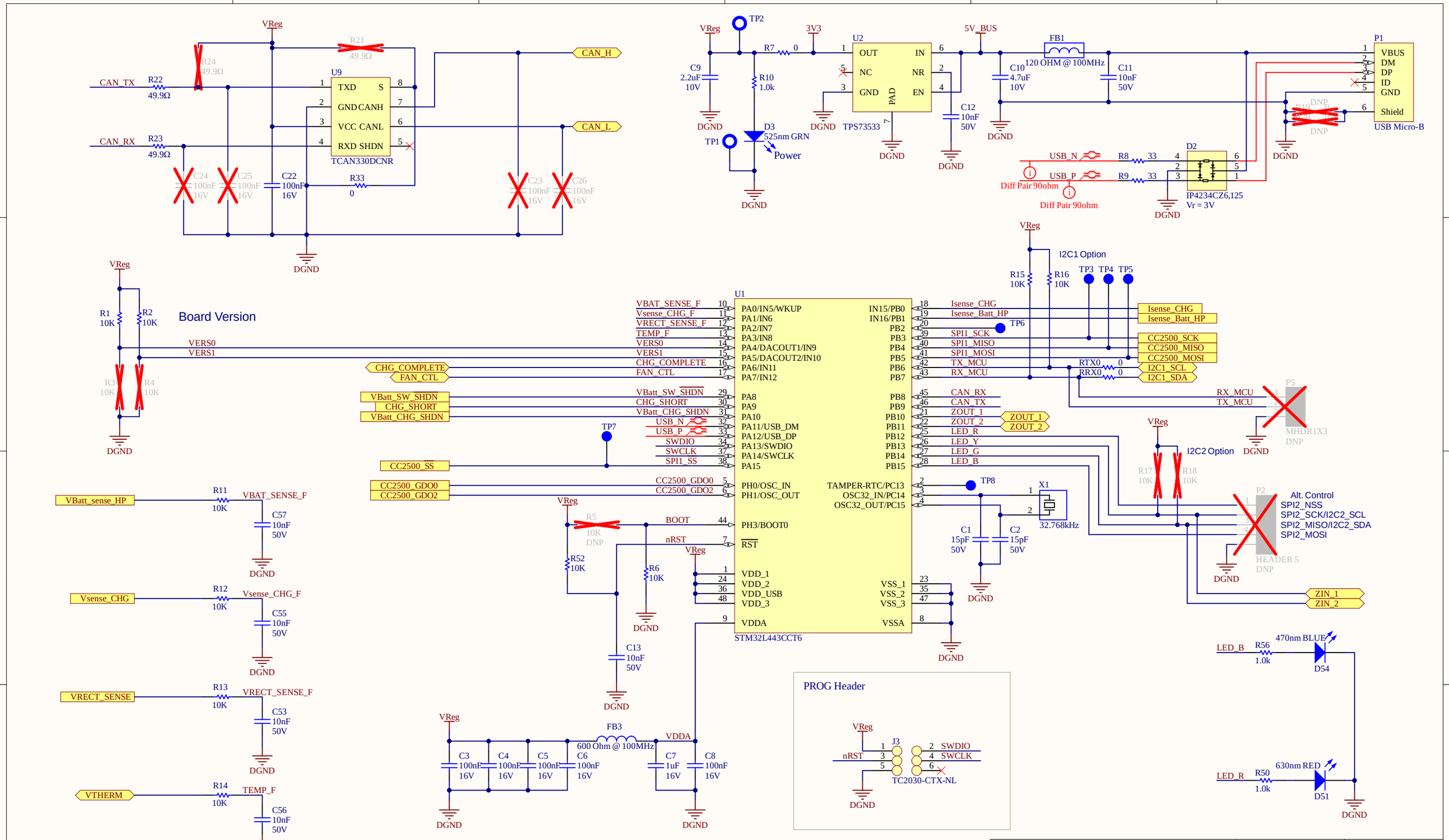

Title	**Mobile MCU**		WiBotic Inc. 9706 4th Ave NE Suite 403 Seattle, WA 98115 USA
Size: B	Number: 213-000014	Revision: A	
Date: 6/11/2024	Time: 3:45:45 PM	Sheet 2 of 3	
File: C:\Users\Patrick\Documents\Projects\pcb_arm_m0_rx\ARM_M0_Drone.SchDoc			

WIBOTIC

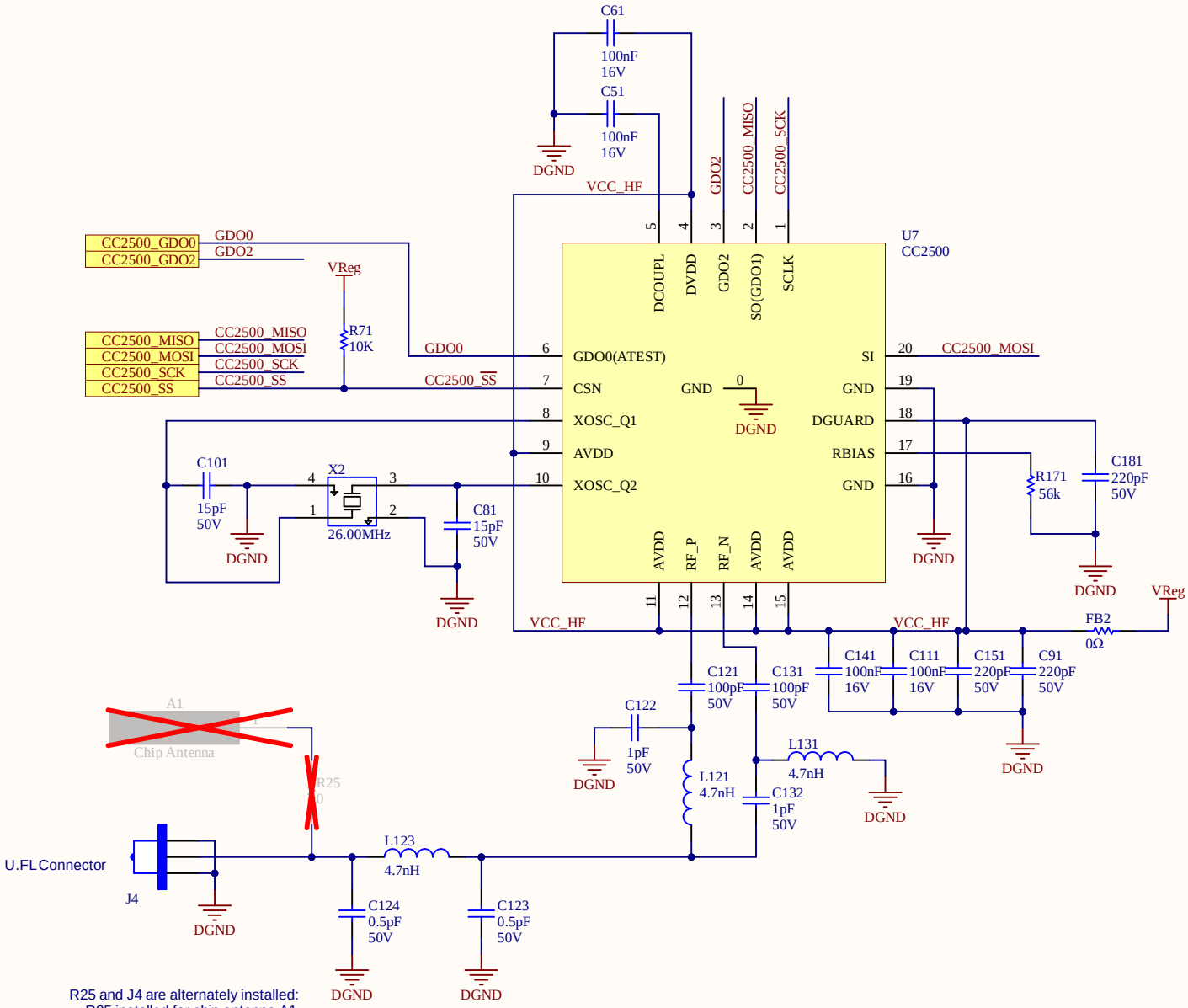

R25 and J4 are alternately installed:
R25 installed for chip antenna A1
Depopulate R25 and install J4 for external antenna

Title	*Mobile 2.4GHz Radio*		
Size: A	Number: 213-000014	Revision: A	
Date: 6/11/2024	Time: 3:45:45 PM	Sheet 3 of 3	
File: C:\Users\Patrick\Documents\Projects\pcb_arm_m0_rx\CC2500_Drone.SchDoc			

WiBotic Inc.
9706 4th Ave NE
Suite 403
Seattle, WA 98115
USA

WIBOTIC™