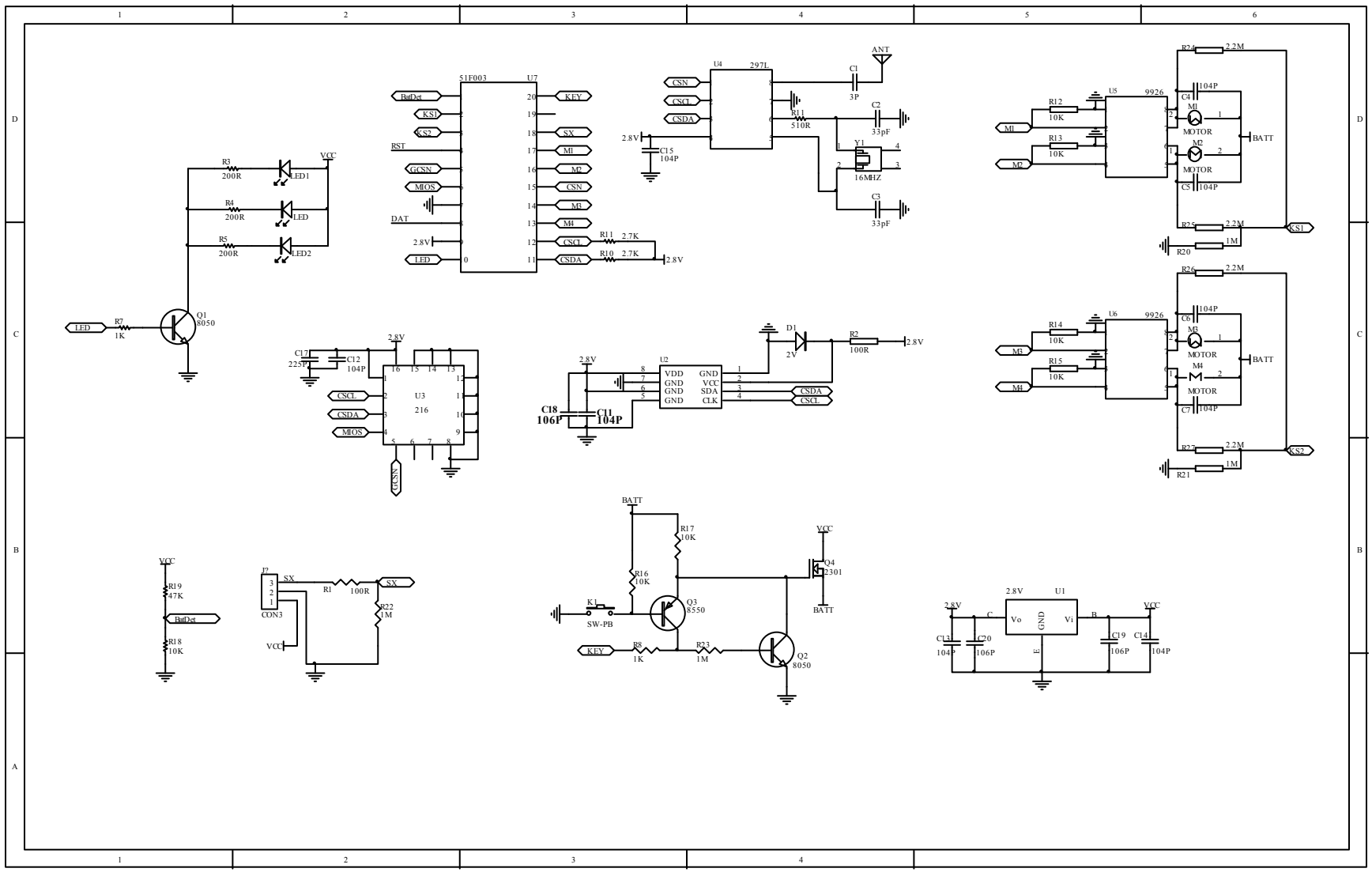
51F003
U7
BatDet
KS1
KS2
RST
GCSN
MIOS
DAT
2.8V
LED
KEY
SX
M1
M2
CSN
M3
M4
CSCL
CSDA
R11 2.7K
R10 2.7K
2.8V
U4
297L
CSN
CSCL
CSDA
2.8V
C15 104P
ANT
C1 3P
R11 510R
C2 33pF
Y1 16MHZ
C3 33pF
R24 2.2M
R12 10K
R13 10K
U5 9926
C4 104P
M1
MOTOR
M2
MOTOR
C5 104P
BATT
R25 2.2M
R20 1M
KS1
R26 2.2M
R14 10K
R15 10K
U6 9926
C6 104P
M3
MOTOR
M4
MOTOR
C7 104P
BATT
R27 2.2M
R21 1M
KS2
VCC
R3 200R
R4 200R
R5 200R
LED1
LED
LED2
LED
R7 1K
Q1 8050
C12 225P
C12 104P
2.8V
U3 216
CSCL
CSDA
MIOS
GCSN
2.8V
C18 106P
C11 104P
U2
VDD GND
GND VCC
GND SDA
GND CLK
CSDA
CSCL
D1 2V
R2 100R
2.8V
VCC
R19 47K
BatDet
R18 10K
J2 CON3
SX
R1 100R
SX
R22 1M
VCC
BATT
R17 10K
R16 10K
K1 SW-PB
Q3 8550
KEY
R8 1K
R23 1M
Q2 8050
VCC
Q4 2301
BATT
2.8V
U1
Vo GND Vi
C
B
E
VCC
C13 104P
C20 106P
C19 106P
C14 104P

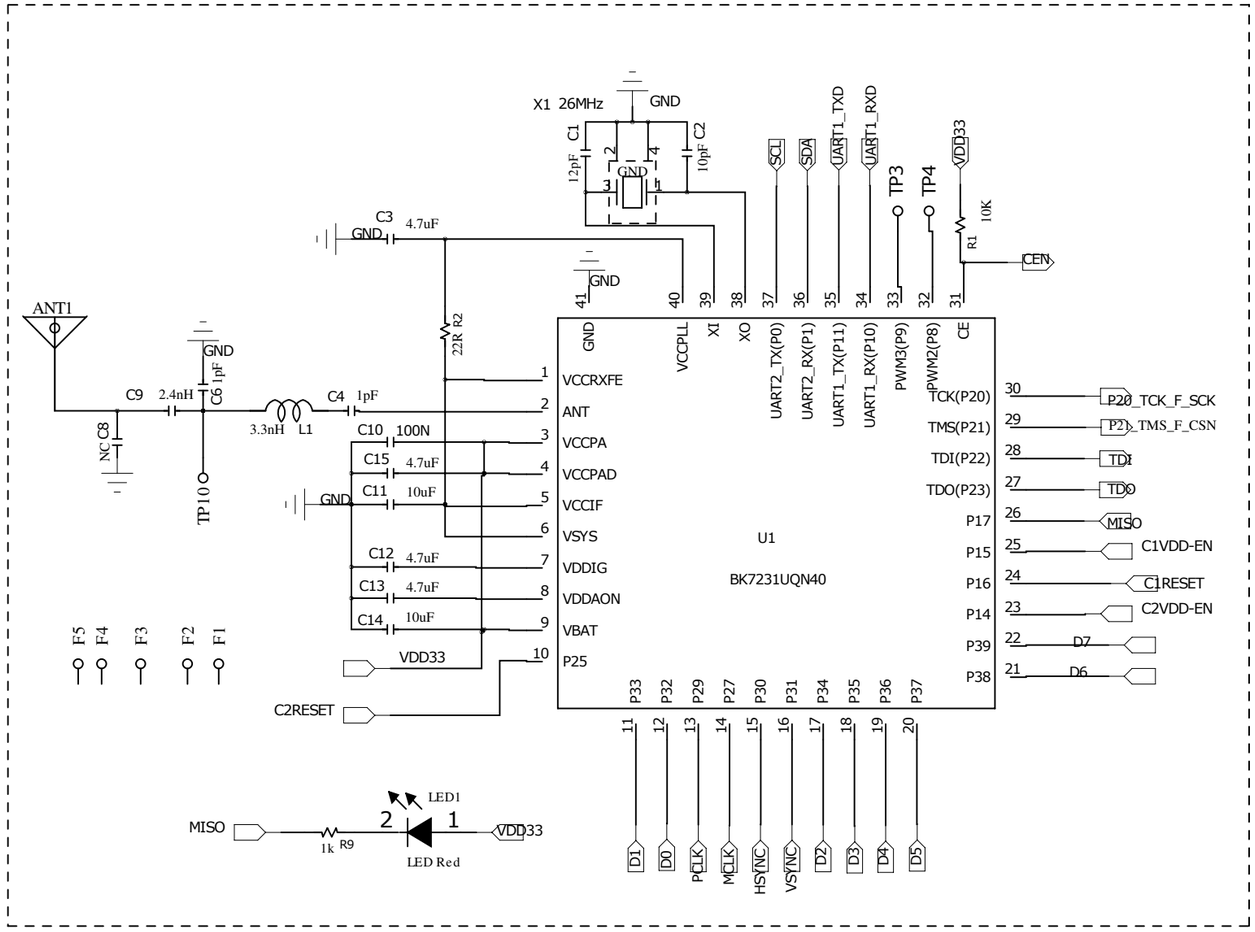
X1 26MHz
GND
C1 12pF
C2 10pF
C3 4.7uF
ANT1
C9 2.4nH
C6 1pF
C4 1pF
3.3nH L1
NC C8
TP10
22R R2
C10 100N
C15 4.7uF
C11 10uF
C12 4.7uF
C13 4.7uF
C14 10uF
VDD33
C2RESET
F5 F4 F3 F2 F1
U1
BK7231UQN40
GND
VCCPLL
XI
XO
UART2_TX(P0)
UART2_RX(P1)
UART1_TX(P11)
UART1_RX(P10)
PWM3(P9)
PWM2(P8)
CE
VCCRXFE
ANT
VCCPA
VCCPAD
VCCIF
VSYS
VDDIG
VDDAON
VBAT
P25
TCK(P20)
TMS(P21)
TDI(P22)
TDO(P23)
P17
P15
P16
P14
P39
P38
P33 P32 P29 P27 P30 P31 P34 P35 P36 P37
SCL
SDA
UART1_TXD
UART1_RXD
TP3
TP4
VDD33
R1 10K
CEN
P20_TCK_F_SCK
P21_TMS_F_CSN
TDI
TDO
MISO
C1VDD-EN
C1RESET
C2VDD-EN
D7
D6
LED1
LED Red
1k R9
D1 D0 PCLK MCLK HSYNC VSYNC D2 D3 D4 D5

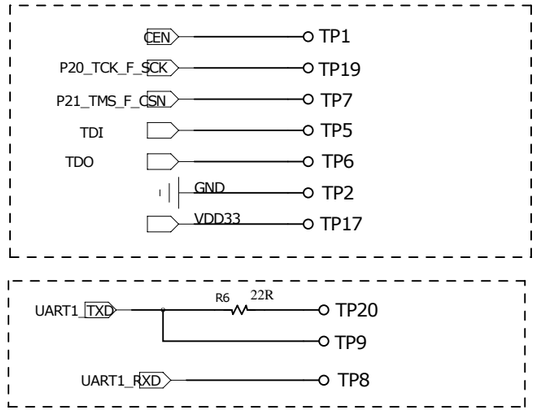
CEN
P20_TCK_F_SCK
P21_TMS_F_CSN
TDI
TDO
GND
VDD33
TP1
TP19
TP7
TP5
TP6
TP2
TP17
UART1_TXD
UART1_RXD
R6 22R
TP20
TP9
TP8

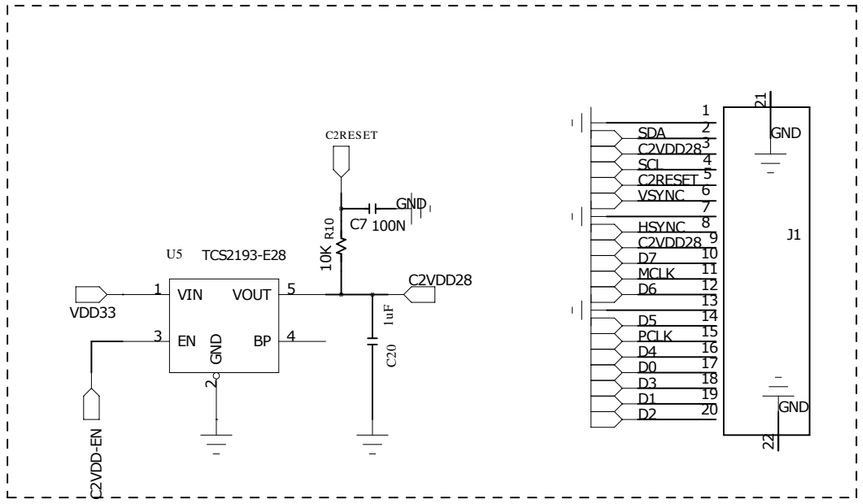
C2RESET
C7 100N
10K R10
U5 TCS2193-E28
VDD33
VIN
VOUT
EN
GND
BP
C2VDD28
C20 1uF
C2VDD-EN
SDA
C2VDD28
SCL
C2RESET
VSYNC
HSYNC
C2VDD28
D7
MCLK
D6
D5
PCLK
D4
D0
D3
D1
D2
J1
GND

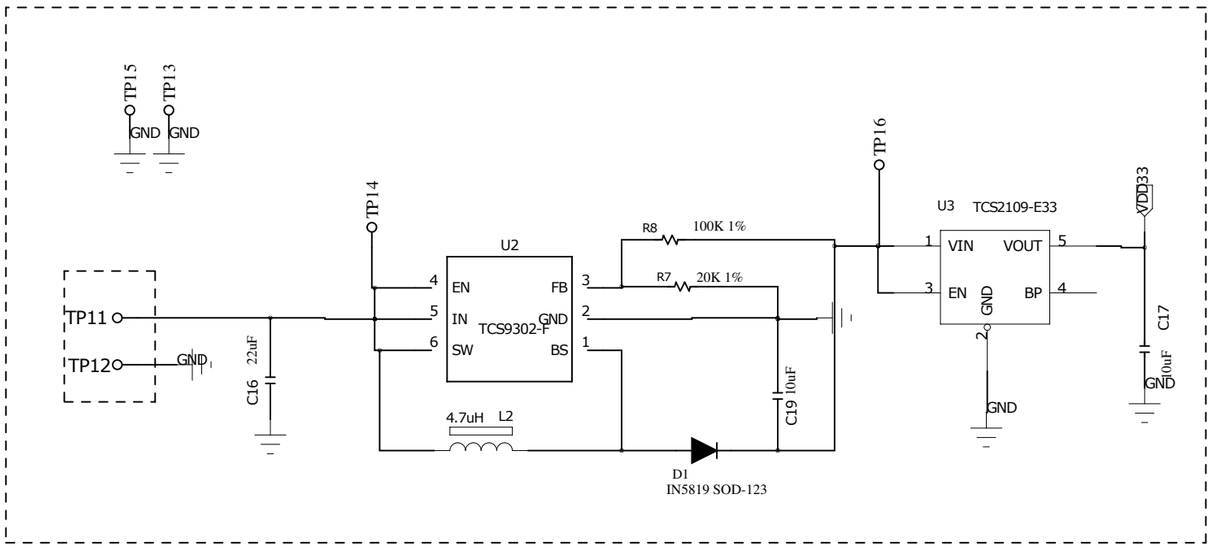
TP15
TP13
GND GND
TP14
TP16
U2
TCS9302-F
EN
IN
SW
FB
GND
BS
R8 100K 1%
R7 20K 1%
TP11
TP12
GND
C16 22uF
4.7uH L2
C19 10uF
D1
IN5819 SOD-123
U3 TCS2109-E33
VIN
VOUT
EN
GND
BP
VDD33
C17 10uF

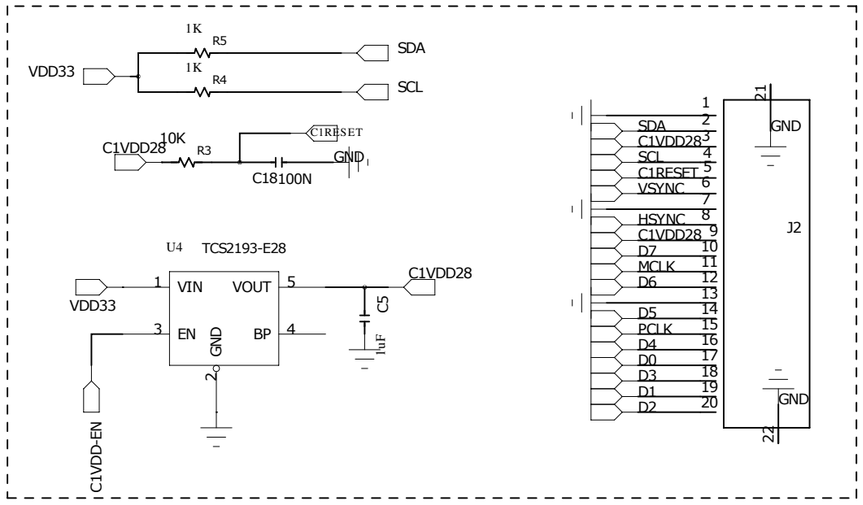
VDD33
1K R5
1K R4
SDA
SCL
C1VDD28
10K R3
C1RESET
C18100N
GND
U4 TCS2193-E28
VIN
VOUT
EN
GND
BP
C5 1uF
C1VDD-EN
SDA
C1VDD28
SCL
C1RESET
VSYNC
HSYNC
C1VDD28
D7
MCLK
D6
D5
PCLK
D4
D0
D3
D1
D2
J2
GND