Luna Products, LLC
3145 Tiger Run Suite 110
Carlsbad, CA 92010
www.lunaproducts.com

FCC ID: 2ATK4-YYS2020
MODEL NUMBER:YYS2020

Document Control Number:
10011659-001 Rev A

WARNING
Cancer &
Reproductive Harm
www.P65Warnings.co.gov

lunaProducts

Thank you for choosing Luna Products 1080p Indoor Wi-Fi Camera

---

This device complies with Part 15 of the FCC's Rules. Operation is subject to the following two conditions:
1 This device may not cause harmful interference, and
2 This device must accept any interference received, including interference that may cause undesired operation.

This equipment has been tested and found to comply with the limits for a Class B digital device, pursuant to Part 15 of the FCC Rules. These limits are designed to provide reasonable protection against harmful interference in a residential installation.

This equipment generates, uses and can radiate radio frequency energy and, if not installed and used in accordance with the instructions, may cause harmful interference to radio communications. However, there is no guarantee that interference will not occur in a particular installation. If this equipment does cause harmful interference to radio or television reception, which can be determined by turning the equipment off and on, the user is encouraged to try to correct the interference by one or more of the following measures:
• Reorient or relocate the receiving antenna.
• Increase the separation between the equipment and receiver.
• Connect the equipment into an outlet on a circuit different from that to which the receiver is connected.
• Consult the dealer or an experienced radio/TV technician for help.

This product complies with FCC radiation exposure limits for an uncontrolled environment. Avoid operating this product at a distance less than 20cm from the user.

CAUTION: Any changed or modifications not expressly approved by the party responsible for compliance could void the user's authority to operate this equipment.

Este dispositivo cumple con la Parte 15 de las normas de la FCC. El funcionamiento está sujeto a estas dos condiciones:
1 Este dispositivo no puede causar interferencia perjudicial.
2 Este dispositivo debe aceptar cualquier interferencia recibida, incluyendo la interferencia que puede causar un funcionamiento no deseado.

Este equipo ha sido probado y se ha comprobado que cumple con las limitaciones para un dispositivo digital Clase B, conforme a la Parte 15 de las normas de la FCC. Estas limitaciones están diseñadas para brindar una protección razonable contra la interferencia perjudicial en una instalación residencial.

Este equipo genera, usa y puede irradiar energía de radiofrecuencia; si no se instala y usa correctamente de acuerdo con las instrucciones, puede causar interferencia perjudicial para las comunicaciones radiales. Sin embargo, no se garantiza que esta interferencia no ocurra en una instalación en particular. Si este equipo llegar a causar una interferencia perjudicial para la recepción de señales de radio o televisión, lo que puede determinarse al apagery encender el equipo, instamos al usuario a intentar corregir la interferencia mediante uno o más de los siguientes métodos:
• Reoriente o reubique la antena receptora.
• Aumente la separación entre el equipo y el receptor.
• Conecte el equipo a una salida en una toma distinta a la que está conectado el receptor.
• Para obtener ayuda, consulte con el dealer o con un técnico de radio/televisión experimentado.

Este producto cumple con los límites de exposición a radiación de la FCC para un entorno no controlado. Evite operar este producto a una distancia menor a 20 cm del usuario.

PRECAUCIÓN: Cualquier cambio o modificación no aprobada expresamente por la parte responsable del cumplimiento podría invalidar la autoridad del usuario para operar este equipo.

Specifications
Indoor Use Only
Operating Temperature: 14°F - 122°F / -10°C~50°C
Relative Humidity: 5-80% Non-Condensing
Resolution: 1920x1080 20fps, 640x360 20fps
Lens: 107° Wide Angle
Effective Focal Length: f=3.9mm
Exposure: Auto
Focus: Fixed Focus
Audio: Built-in Mic/Speaker, full duplex
Video Compression: H.264 High Profile
Photo Format: JPG
Enhancement: 3D Noise Reduction
Alert Modes: Motion Detection, Person Detection, Abnormal Sound Detection
Power Consumption: 5W (Max)
Micro SD Card Capacity: 8 to 32GB
Night Vision: IR Cut+8 Infrared LEDs
Support Platform: Android / iOS
Wireless Standard: 802.11 b/g/n, 2.4GHz
Wireless Security: WEP/WPA-PSK/WPA2-PSK
Power Adapter: 5VDC/1A, Micro USB

LIMITED WARRANTY
This Luna Products LLC product is warranted against defects in material and workmanship for one (1) year. This warranty extends only to wholesale customers who buy direct from Luna Products LLC or through Luna Products LLC's normal distribution channels. Luna Products LLC does not warrant this product to consumers. Consumers should inquire from their selling dealer as to the nature of the dealer's warranty, if any. There are no obligations or liabilities on the part of Luna Products LLC for consequential damages arising out of or in connection with use or performance of this product or other indirect damages with respect to loss of property, revenue, or profit, or cost of removal, installation, or re-installation. All implied warranties for functionality, are valid only until the warranty expires. This Luna Products LLC Warranty is in lieu of all other warranties expressed or implied.

Copyright © 2020 Luna Products, LLC. All Rights Reserved. Luna Products is a registered trademark. All other products or name brands are either trademarks or registered trademarks of their respective owners. Specifications and product availability subject to change without notice. *For more information visit www.lunaproducts.com

The Luna Products 1080p Indoor Wi-Fi Camera Table of Contents

English ---------- 1
Español ---------- 8

---

1. Camera Kit

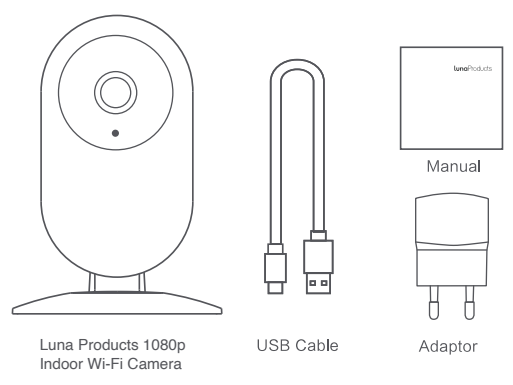

2. Getting to Know Your Luna Products 1080p Indoor Wi-Fi Camera

Note: To enable local recording of video clip, please insert a Micro SD card* (not included) to the slot as shown below.
*support minimum of 8GB up to 32GB Micro SD card.

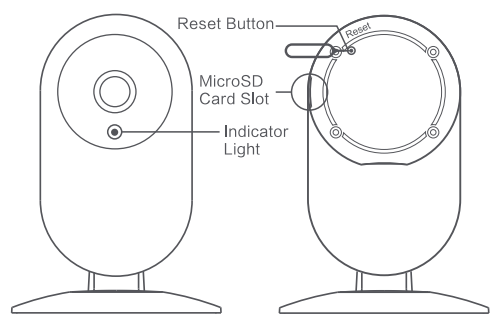

3. The Luna Products 1080p Indoor Wi-Fi Camera uses the Yi Home App

Download the app by searching "YI Home" on the App Store™ or Google Play. Alternatively, you can open a QR scanner app and scan the YI Home app QR code below to install the app.

Follow the simple setup instruction on the app. You can configure multiple cameras one at a time.

4. Power on the Camera

Place the camera close to the router, and make sure Wi-Fi access is available, then connect the cable to the Micro USB port on the bck of the camera to the power outlet as shown.

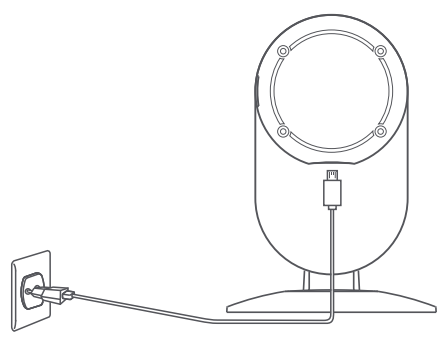

5. Preview Live Footage

Use the YI Home app to watch live footage on your phone. You can also record and save videos or images.
Attention: It is illegal in many juristictions to record an audio conversation without the consent of all individuals. Please comply with all laws when using your Luna Products 1080p Indoor Wi-Fi Camera.

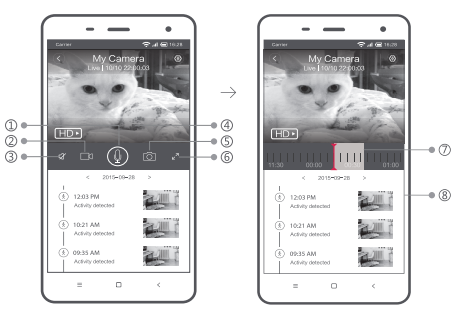

① Hold to talk
② Record Videos
③ Mute
④ Show timeline
⑤ Take photos
⑥ Full screen
⑦ Playback history
⑧ Alerts

6. Switch Wi-Fi Networks

When you need to switch Wi-Fi networks or upgrade your Wi-Fi password, follow the instructions below:
1. Use a clip to press the reset button on the back of the camera, and wait until the yellow light come on.
2. Open the YI Home app on your phone, and connect the camera to your phone again. Your videos stored on your MicroSD card will not be affected.

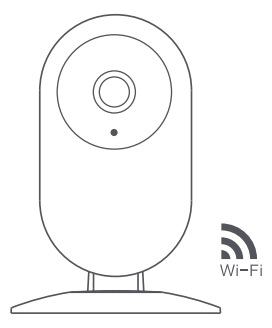

---

1. Read these instructions
2. Clean only with dry cloth
3. This camera is for indoor use only
4. Only use attachments/accessories specified by the manufacturer
5. Unplug the apparatus during lightning storms or when unused for long periods of time
6. To get the best usage out of this product, please consistently update to the latest versions of our app and firmware.

WARNING:
Open flame sources such as candles should not be places near or on the product

Note:
Yi is a trademark of Shanghi Xaioiy Technology Co., Ltd.

1. Kit de la cámara

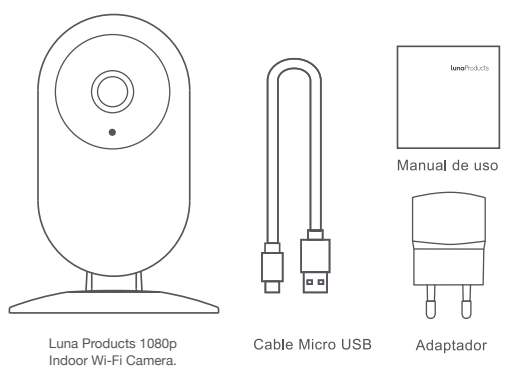

2. Conociendo a la cámara

Nota: Para activar la grabacion local de video, inserte una tarjeta Micro SD (no incluida) en la ranura como se muestra a continuacion.
Soporta una tarjeta Micro SD de minimo 8GB y maximo 32GB.

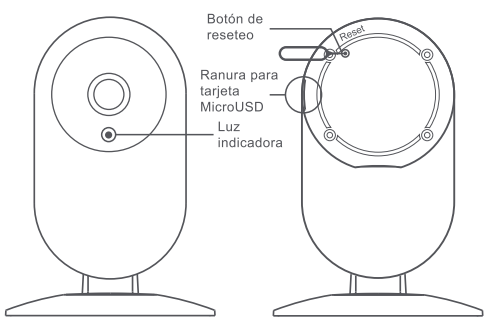

3. The Luna Products 1080p Indoor Wi-Fi Camera uses the Yi Home App

Descargue la aplicacion, buscando YI Home an App Store o Google Play. Alternativamente, puede abrir una aplicacion de escaner QR y escanear el codigo QR de la aplicacion YI Home abajo para instalar la aplicacion.

Siga las sencillas instucciones de configuracion de la aplicacion. Puede configurar varias camaras una a la vez.

4. Encender la cámara

Coloque la camara cerca del router y asegurese de que el acceso Wi-Fi este disponible y, a continuacion, conecte el cable al puerto Micro USB en la parte posterior de la camara a la toma de corriente como se muestra.

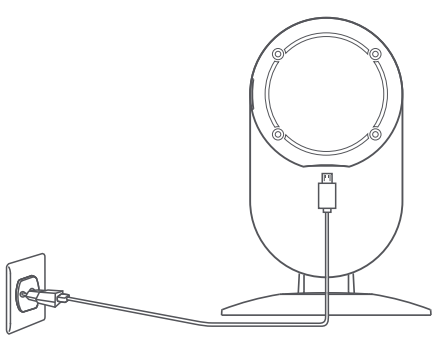

5. Previsualizar el material fílmico

Utilice la aplicacion YI Home para ver el material filmico en su telefono. Tambien puede grabar y guardar videos o imagenes.
Atencion: En muchas jurisdicciones es ilegal grabar una conversacion de audio sin el consentimiento de todos los individuos. Por favor, cumpla con todas las leyes cuando utilice su Luna Products 1080p Indoor Wi-Fi Camera

① Mantenga presionado para hablar
② Grabar videos
③ Silenciar
④ Mostrar línea de tiempo
⑤ Tomar fotos
⑥ Pantalla completa
⑦ Historial de reproducción
⑧ Alertas

6. Cambiar Redes Wi-Fi

Cuando necesite cambiar las redes Wi-Fi o actual su contrasena de Wi-Fi, siga las instrucciones a continuacion:

1. Utilice un clip para presionar el boton de reinicio el la parte posterior de la camara y espere hasta que se encienda la luz amarilla

2. Abra la aplicacion YI Home en su telefono y vuelva a conectar la camara al telefono. Sus videos que se almacenan en la tarjeta MicroSD co se veran afectados.

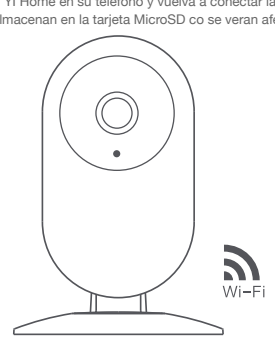

Indicaciones de seguridad importantes

1. Lea estas instrucciones.
2. Limpie solo con ropa seca
3. El uso de esta camara se reserva unicamente para espacios de interior
4. Utilice unicamente accesorios especificados por el fabricanteior
5. Desconecte el dispositivo durante
6. Para sacae el maximo provecho de este producto, porfavor actualice frecuentemente las ultimas versiones de nuestra app y firmware

Advertencia:
Fuentes abiertas de llamas como velas no deben ser ubicadas cerca o encima del producto

Nota: Yi is a trademark of Shanghi Xaioiy Technology Co., Ltd.