REVISION RECORD			
LTR:	ECO NO:	APPROVED:	DATE:
0	INITIAL RELEASE		

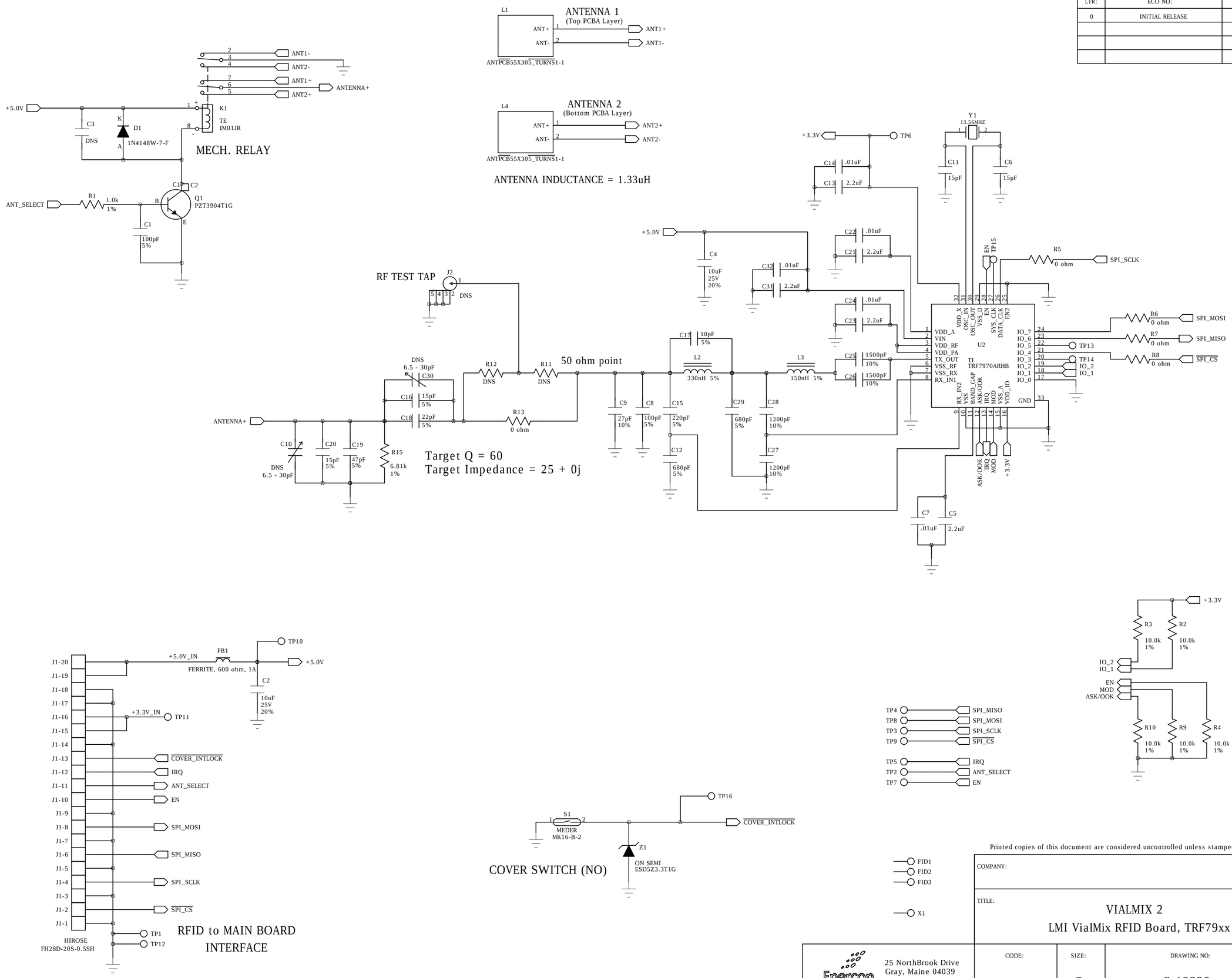

Printed copies of this document are considered uncontrolled unless stamped "CONTROLLED"

COMPANY:

TITLE:

VIALMIX 2

LMI VialMix RFID Board, TRF79xx

Enercon Technologies

25 NorthBrook Drive
Gray, Maine 04039
U.S.A.

CODE:	SIZE:	DRAWING NO:	REV:
	C	S-19329	0

DRAWN:	DATED:
BC	10/24/18

SCALE:

SHEET: 1 OF 1