WIZZILAB
Connecting Things

WOLT-D7A-S/M/XL

Rev. 0.6

Ultra low power D7A/LoRaWAN Sub-GHz Interactive Location Tag

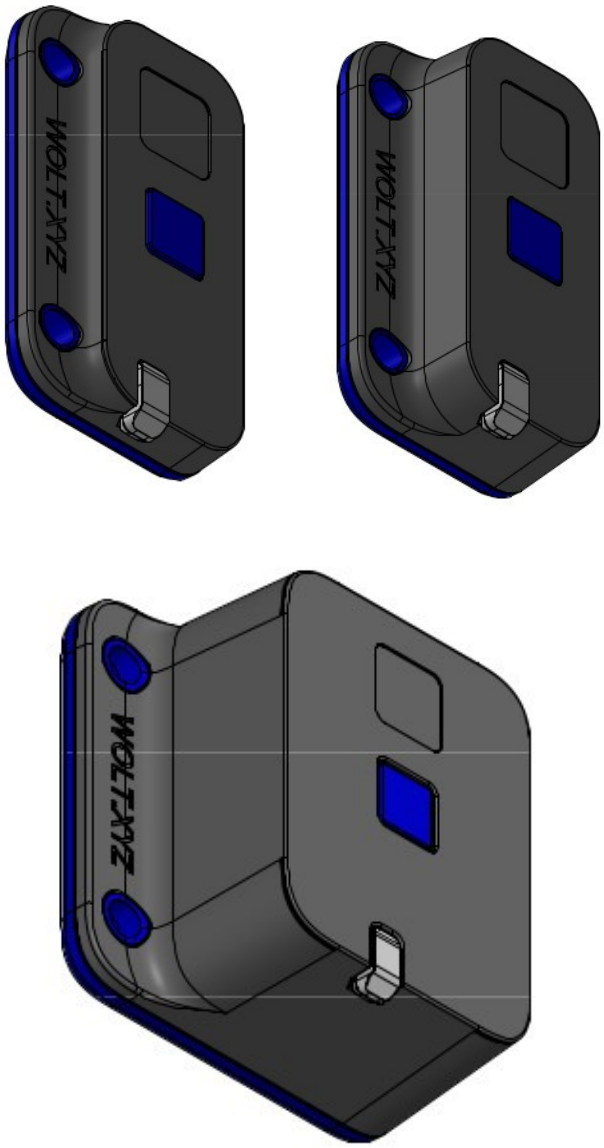

Description

- Combined D7A-FSK/D7A-LoRa & LoraWAN battery powered interactive location tag with years-long lifetime.
- Fully integrated off-the-shelf options and motion detection sensor.
- RBG LED and button human interface
- Functions over long-range LoRaWAN, mid-range DASH7-FSK/LoRa
- Identification & configuration over NFC
- FOTA over DASH7.
- NFC Passive Tag
- Operating temperature: -40 °C to 85 °C
- IP65 casing

Sub-GHz modem

- Murata CMWX1ZZABZ hardware
- FCC, CE / RED and UKCA certification
- Operates in the 868-915 MHz ISM bands
- Embedded chip antenna.
- Bi-directional DASH7-FSK/LoRa v1.2 Industrial IoT connectivity with 1s latency (www.dash7-alliance.org)
- Bi-directional LoRaWAN connectivity (uplink driven).
- IoT modulation schemes FSK 1.8bpsk/ 55kbps or LoRa(125kHz / SF 6 to 10)
- Output power up to +14 dBm on ECC and +13.2 dBm (FSK),+13.1dBm(Lora)on FCC.

Applications

- Assets location with < 10m precision
- Security systems
- Industrial monitor and control
- Internet of things (IoT)
- WizziLab product line at www.wizzilab.com/products

Table of Contents

Table of Contents....2
List of tables....2
1 Variants....3
1.1 WOLT-D7A-S....3
1.2 WOLT-D7A-M....4
1.3 WOLT-D7A-XL....5
2 Block Diagram....6
2.1 Sub-GHz Modem....6
2.2 NFC Passive Tag....6
2.3 Sensors and Actuators....7
3 Hardware specification....8
3.1 Recommended operating conditions....8
3.2 Absolute maximum ratings(1)....8
3.3 Battery....8
4 Sub-GHz modem....9
4.1 Certifications....9
4.2 Transmitting power....10
4.3 Receiver sensitivity....10
4.4 Ranging....10
5 Application....11
5.1 Assets Localization Tracker....11
5.2 Ready to deploy....11
5.3 Firmware....12
6 Installation....13
6.1 Mounting....13
6.2 Activation....15
7 The WOLT Family....16
8 FCC Caution....17
9 Ordering information....18
10 Revision history....19

List of tables

Table 1. Recommended operating conditions....8
Table 2. Absolute maximum ratings....8
Table 3. Lifetime....8
Table 4. DASH7 sub-GHz data rates....9
Table 5. DASH7 sub-GHz transmission power....10
Table 6. DASH7 sub-GHz reception sensitivity....10
Table 7. Ranging error....10
Table 8. Document revision history....19

1 Variants

1.1 WOLT-D7A-S

The WOLT-D7A-S is proposed in a 91 x 52 x 5 mm casing respecting the IP65 specification of IEC 529 (Dust and Hose-proof) and powered with a flat LiMnO2 battery with 2300 mAh capacity @3.0V.

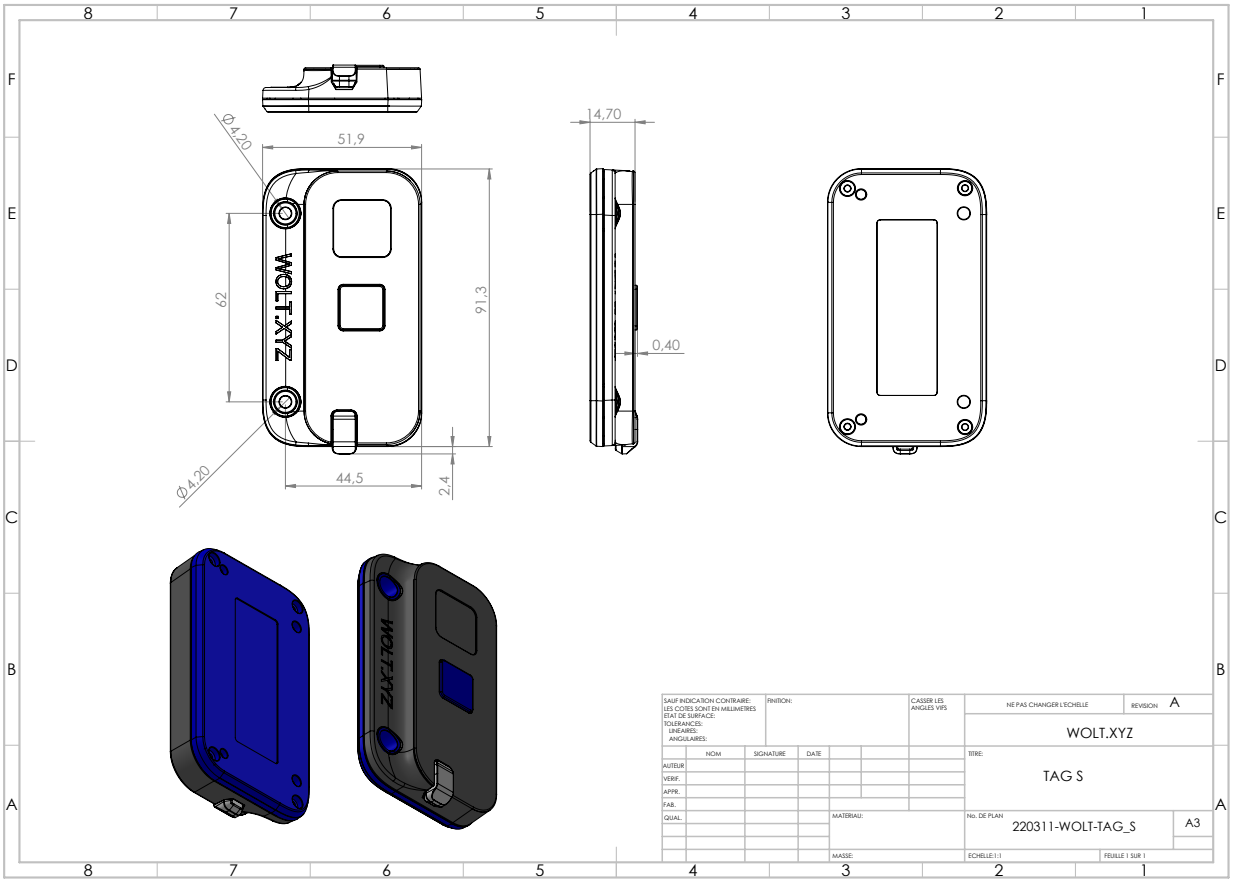

1.2 WOLT-D7A-M

The WOLT-D7A-M is proposed in a 91 x 52 x 25 mm casing respecting the IP65 specification of IEC 529 (Dust and Hose-proof) and powered with a LiSOCl2 battery with 5400 mAh capacity @3.6V

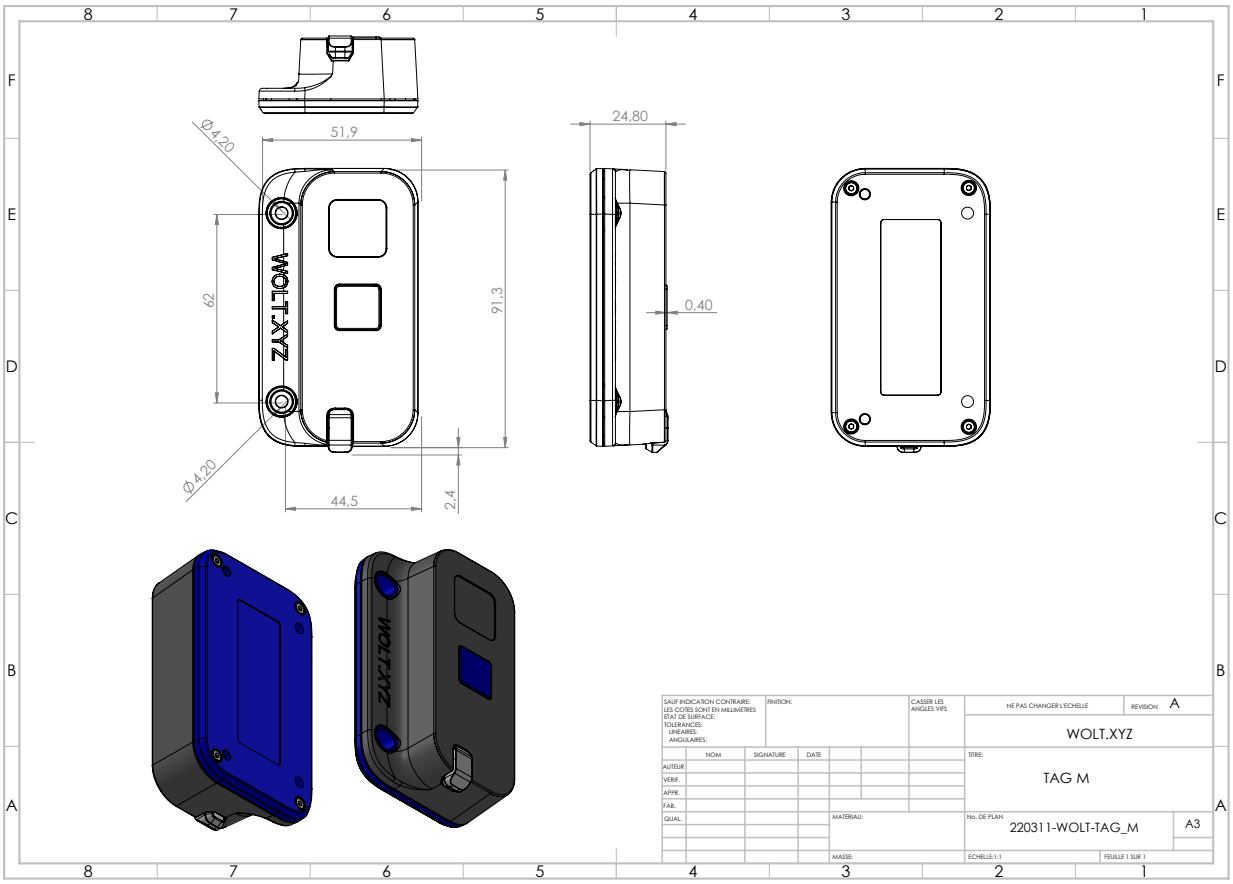

1.3 WOLT-D7A-XL

The WOLT-D7A-XL (aka Anchor) is proposed in a 94 x 90 x 46 mm casing respecting the IP65 specification of IEC 529 (Dust and Hose-proof) and powered with a LiSOCl2 battery with 38000 mAh capacity @3.6V

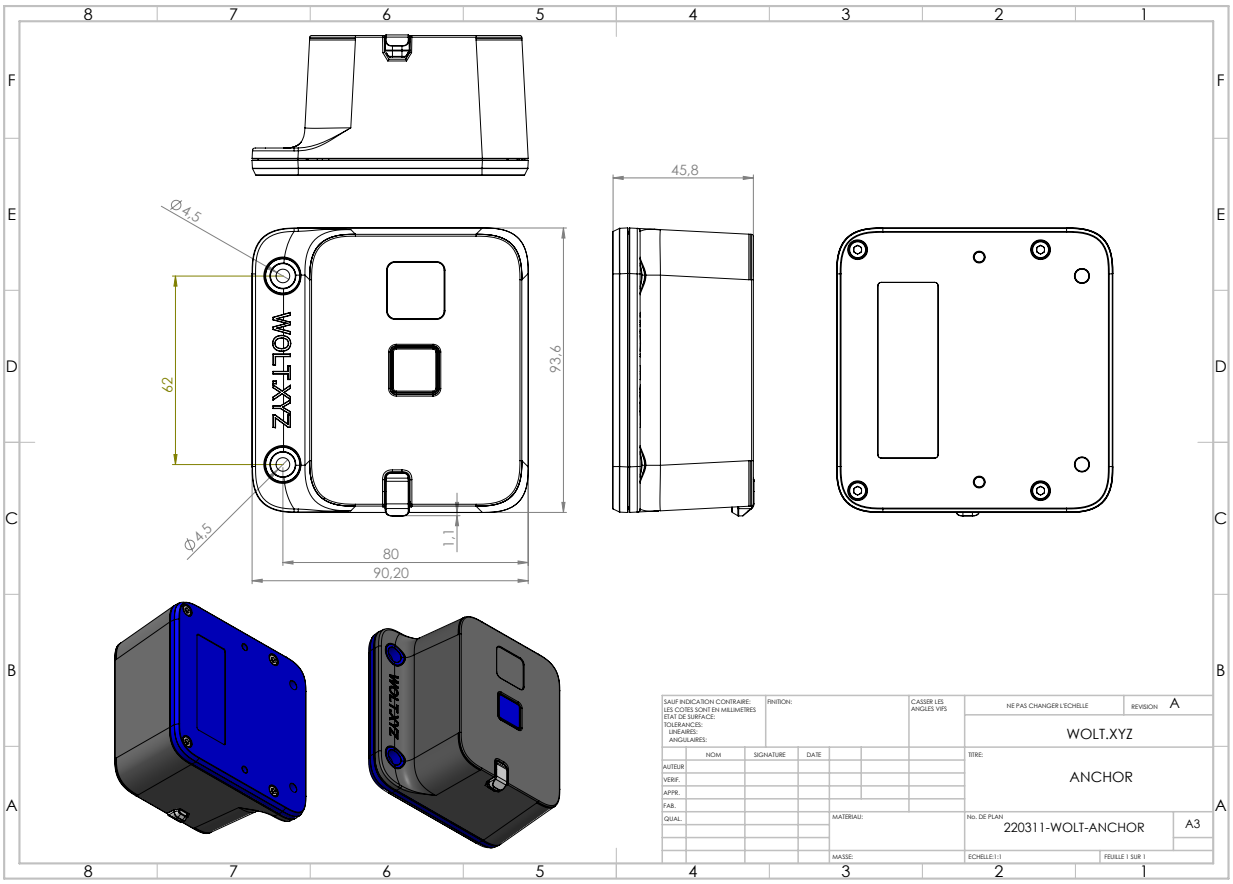

2.1 Sub-GHz Modem

The devices features a combined DASH7-FSK/LoRa & LoRaWAN modem functioning @868 MHz in the RED/EU regulated areas and @915MHz in the FCC regulated areas. It both allows communication over long-range LoRaWAN and mid-range DASH7-FSK/LoRa, and over-the-air configuration and code update using the D7A protocol.

2.2 NFC Passive Tag

Allows identification & configuration over NFC

2.3 Sensors and Actuators

Accelerometer

On board ultra low power 3 axis accelerometer.

Temperature

On board temperature sensor.

Battery

On board battery measure circuit.

LED

On board RGB LED with integrated controller.

Button

On board button for human-machine interaction.

3 Hardware specification

3.1 Recommended operating conditions

Table 1. Recommended operating conditions

Symbol	Parameter	Min.	Typ.	Max.	Units
T_A	Operating ambient temperature range	-40	-	85	°C

3.2 Absolute maximum ratings(1)

Table 2. Absolute maximum ratings

Symbol	Parameter	Min.	Typ.	Max.	Units
T_{STG}	Storage temperature range	-40	-	85	°C

(1) Stresses beyond those listed under absolute maximum ratings may cause permanent damage to the device. These are stress ratings only and functional operation of the device at these or any other conditions beyond those indicated under recommended operating conditions is not implied. Exposure to absolute–maximum–rated conditions for extended periods may affect device reliability.

3.3 Battery

The WOLT-D7A comes in three different versions, S/M/XL, with increasing battery capacity

Table 3. Lifetime

Symbol	Parameter	Min.	Typ.	Max.	Units
T_{LIFE}	Motion sensor ON D7A downlink with 1s latency	-	3	-	years(1)
$Loc_{,S}$	Number of locations S tag	-	0.1	-	Mlocs(2)
$Loc_{,M}$	Number of locations M tag	-	1	-	Mlocs
$Loc_{,XL}$	Number of locations XL tag	-	10	-	Mlocs

(1) 60 s per day cumulative transmission time (40 LoRaWAN uplink messages with SF12 LoRa modulation or 1500 D7A uplink messages with GFSK modulation at 55 kbps. Permanent D7A downlink accessibility with 1s latency.

(2) one location = measurement of power attenuation (aka link budget or RSSI) with at least 4 anchors and report to the location server in the Cloud

4 Sub-GHz modem

4.1 Certifications

ECC/RED

If deployed in Europe, the WOLT is provided with ECC/RED certified DASH7/LoRaWAN (TTN) network profiles.

UKCA

If deployed in the United Kingdom, the WOLT is provided with certified DASH7/LoRaWAN (TTN) network profiles.

FCC

If deployed in North America, the WOLT is provided with FCC certified DASH7/LoRaWAN (TTN) network profiles.

4.2 Transmitting power

Table 5. DASH7 sub-GHz transmission power

Condition	Max TX power	Units
ECC/RED regulations	+14	dBm
FCC regulations	Lora: 13.1, FSK: 13.2	dBm

4.3 Receiver sensitivity

Table 6. DASH7 sub-GHz reception sensitivity

Modulation scheme	Rate	Typical Sensitivity	Units
FSK	High	-105.0	dBm
	Normal	-110.0	dBm
	Low	-117.5	dBm
LoRa	SF8	-125.5	dBm
	SF10	-131.0	dBm
	SF11	-133.5	dBm
	SF12	-135.5	dBm

4.4 Ranging

Table 7. Ranging error

Symbol	Parameter	Min.	Typ.	Max.	Units
$E_{DIST\text{-}D7A}$	Location error(1) based on power attenuation (link budget)	-	10	-	m
$E_{DIST\text{-}LWAN}$	Location error(1) based on power attenuation (link budget)	-	1000	-	m

(1) Highly depends on anchor / gateway density, line-of-sight conditions, operator.

5 Application

5.1 Assets Localization Tracker

The WOLT can be used for efficient combined D7A/LORAWAN tracking due to the combination of long / mid / short range connectivity. It is also useful for identification due to its NFC connectivity. The RSSI-based location provides accuracy up to 3 m.

5.2 Ready to deploy

The WOLT-D7A is suited for proof of concept, pilot and volume applications. By default, it is provisioned with LoRaWAN credentials for TTN (www.thethingsnetwork.org). For DASH7 communication, WizziLab provides infrastructure for easy D7A network deployment. The WOLT-D7A seamlessly connects to the WizziLab's DASH7 Industrial IoT platform.

For details visit our website : www.wizzilab.com/products

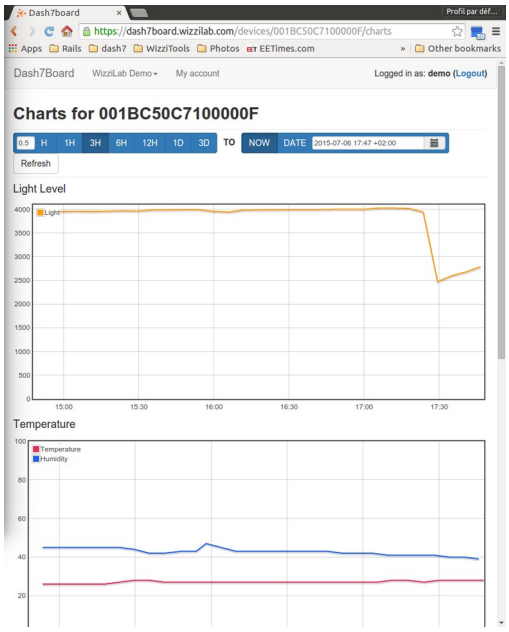

DASH7 Access Point (gateway) and Network Management Platform
(https://dash7board.wizzilab.com)

5.3 Firmware

The WOLT is provided with configurable firmware, allowing to select beacon rates, beacon conditions (motion detection, …) and beacon networks (LoRaWAN and/or D7A). Downlink access over D7A and LoRaWAN is available for static / dynamic configuration, FOTA and actuation (LED blinking). Identification over NFC is available as well.

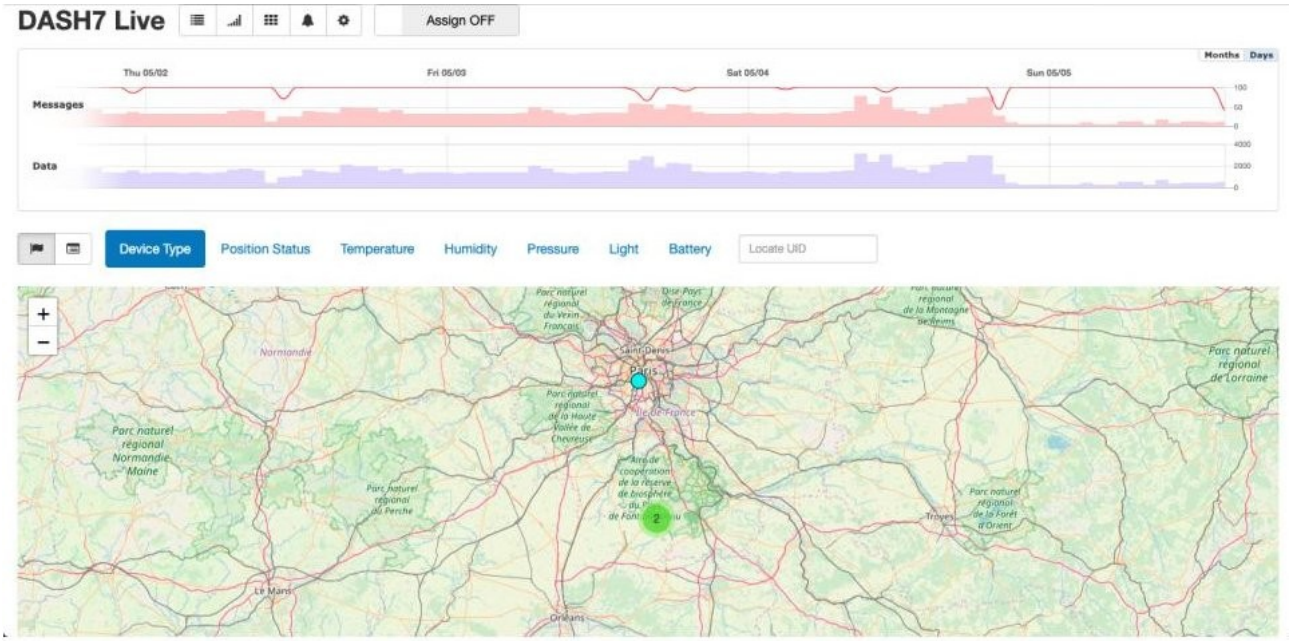

DASH7 Logistics Management Platform (https://dash7board.wizzilab.com)

6 Installation

6.1 Mounting

Direct Mounting

Device can be fixed directly to a mount by screwing through the available M4 holes.

Magnets

The bottom side of any casing can be optionally equipped with magnets, allowing to stick to metallic plates.

Colson Support

A Colson accessory can be affixed to the device, compatible with all casing versions.

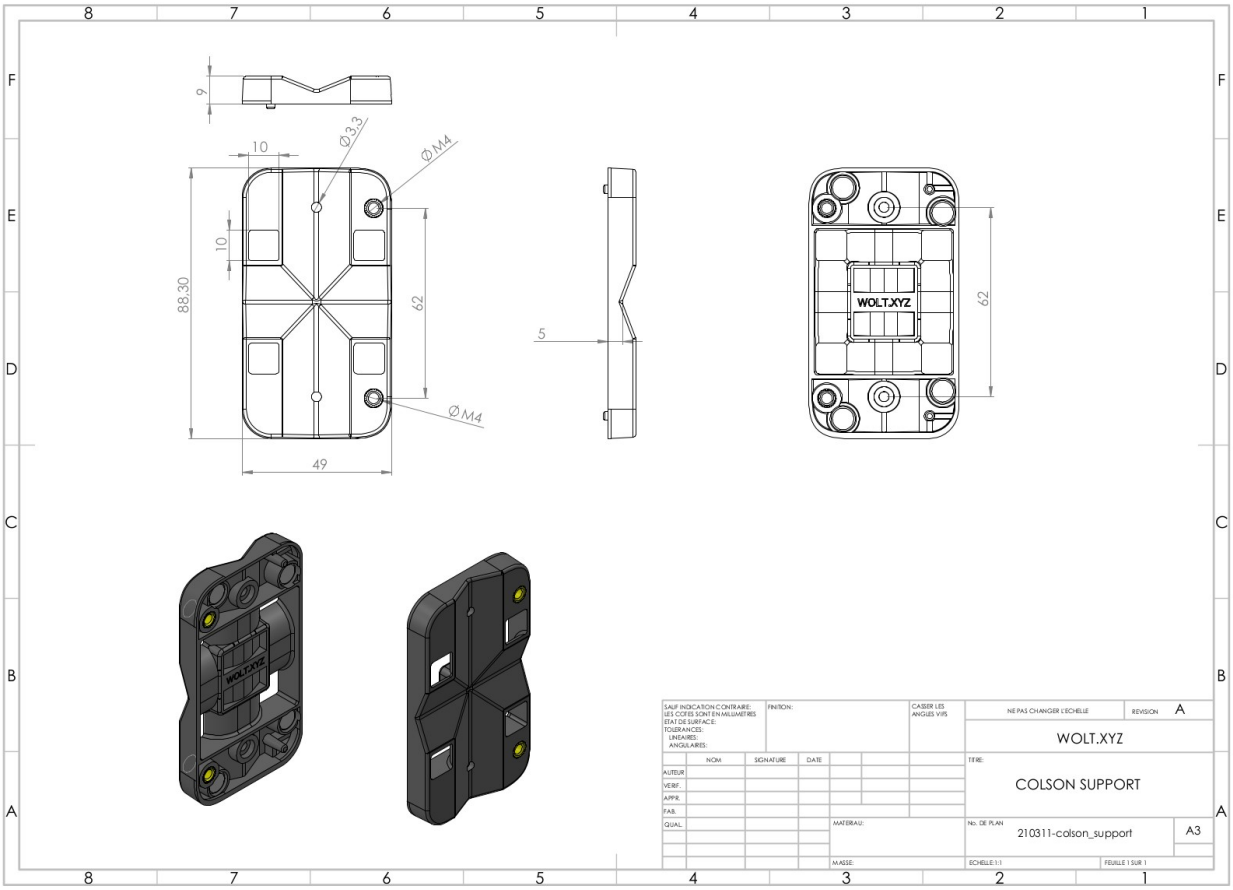

Go-Pro Support

A Go-Pro accessory can be affixed to the device, compatible with all casing versions.

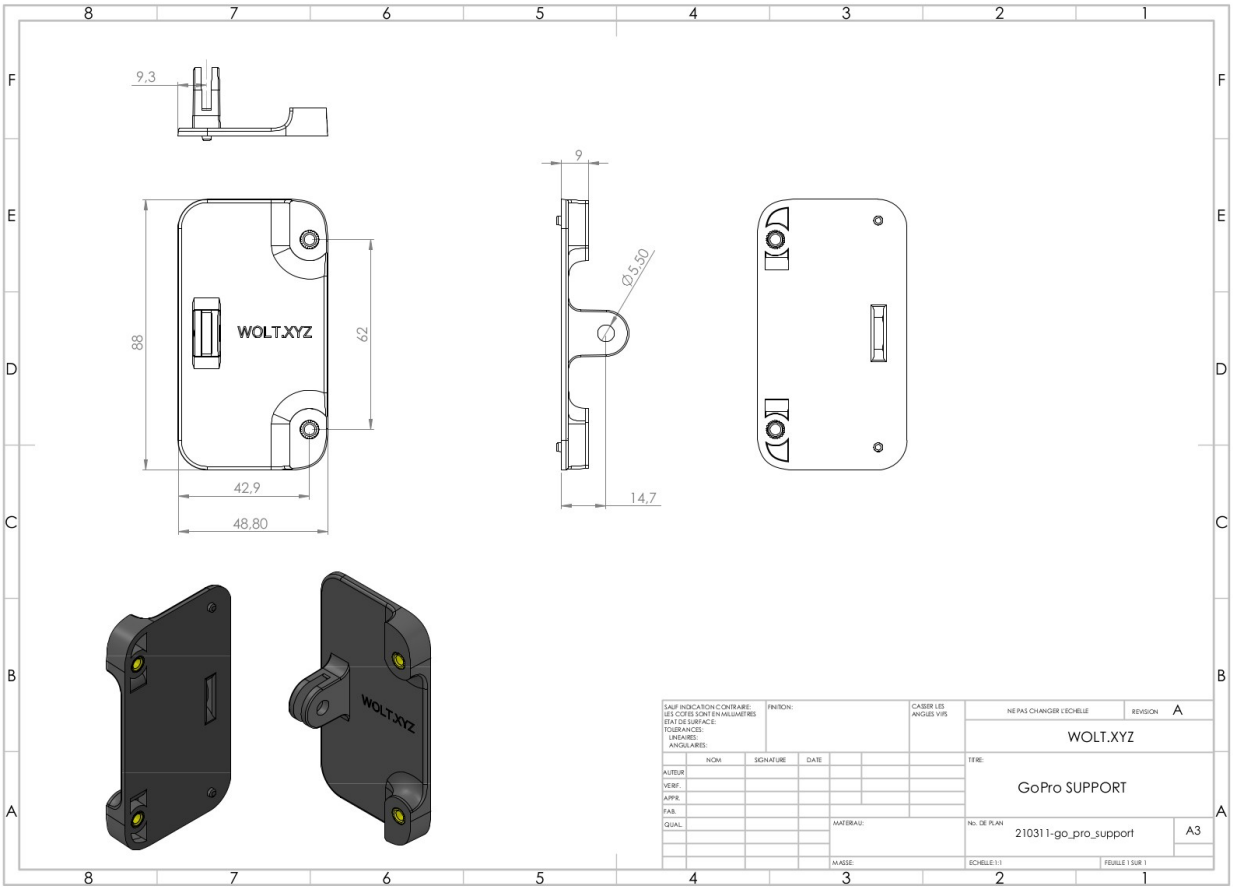

6.2 Activation

By default devices are produced and shipped in shelf mode. They need to be activated on the dash7board.

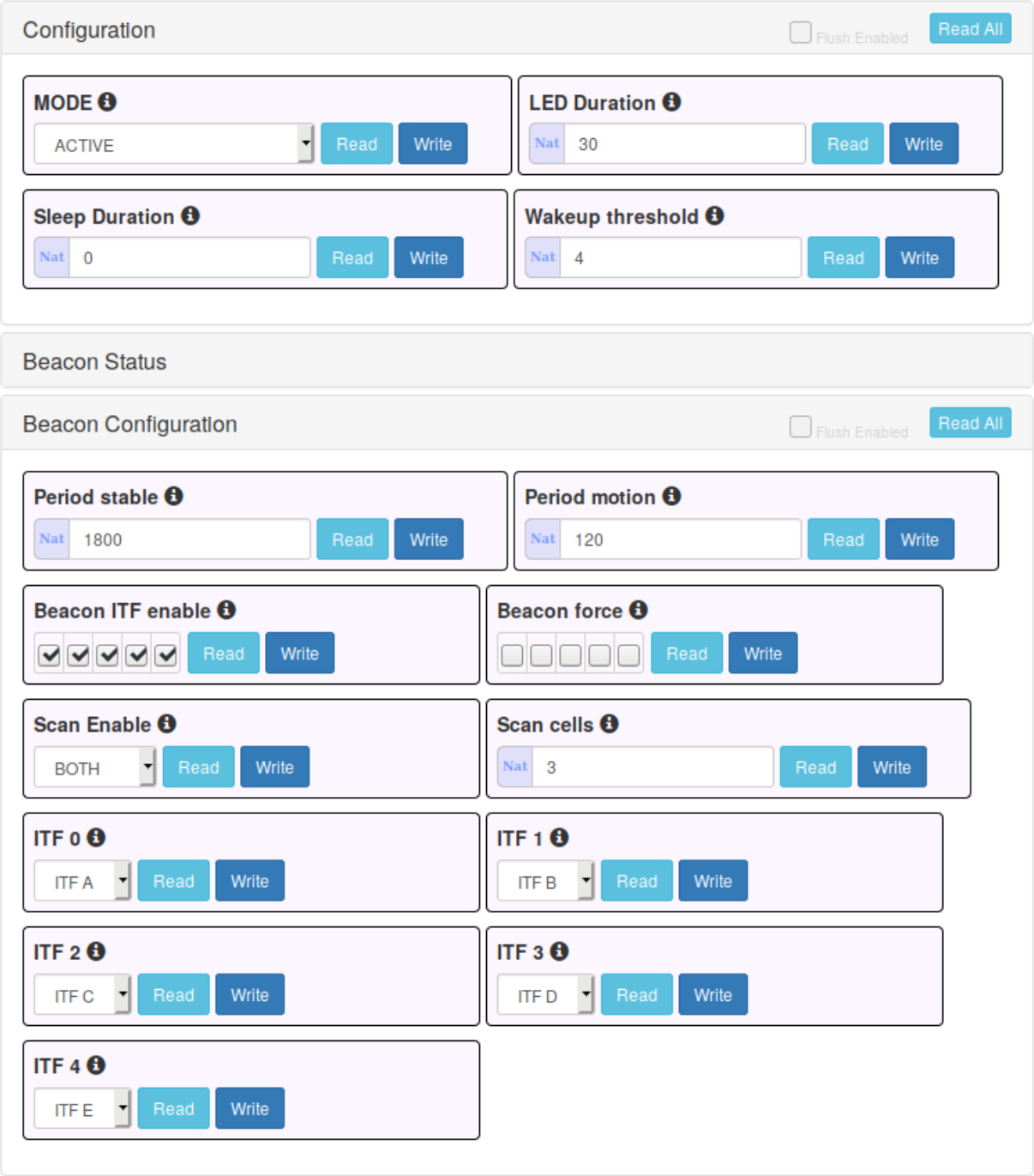

For details, follow the instruction at : https://wizzilab.com/wiki/#!hardware/wolt-d7a.md

7 The WOLT Family

The WOLT trackers family also includes an ultra wide band tracker, WOLT-UWB dual mode UWB/FSK/LORA tracker.

For details visit our website : www.wizzilab.com/products

8 FCC Caution

Any Changes or modifications not expressly approved by the party responsible for compliance could void the user's authority to operate the equipment.

This device complies with part 15 of the FCC Rules. Operation is subject to the following two conditions: (1) This device may not cause harmful interference, and (2) this device must accept any interference received, including interference that may cause undesired operation.

IMPORTANT NOTE:

Note: This equipment has been tested and found to comply with the limits for a Class B digital device, pursuant to part 15 of the FCC Rules. These limits are designed to provide reasonable protection against harmful interference in a residential installation. This equipment generates, uses and can radiate radio frequency energy and, if not installed and used in accordance with the instructions, may cause harmful interference to radio communications. However, there is no guarantee that interference will not occur in a particular installation. If this equipment does cause harmful interference to radio or television reception, which can be determined by turning the equipment off and on, the user is encouraged to try to correct the interference by one or more of the following measures:

—Reorient or relocate the receiving antenna.

—Increase the separation between the equipment and receiver.

—Connect the equipment into an outlet on a circuit different from that to which the receiver is connected.

—Consult the dealer or an experienced radio/TV technician for help.

FCC Radiation Exposure Statement:

This equipment complies with FCC radiation exposure limits set forth for an uncontrolled environment .This equipment should be installed and operated with minimum distance 20cm between the radiator & your body.

9 Ordering information

Contact us at : contact@wizzilab.com

Or visit our website: http://www.wizzilab.com/products

10 Revision history

Table 8. Document revision history

Date	Revision	Changes
2022-03-09	0.1	Document creation.
2022-03-11	0.2	Casing description
2022-04-21	0.3	Integrate feedback for certification process
2022-10-31	0.4	Specific FCC additions
2022-12-28	0.5	Fix typos
2023-01-13	0.6	Update power level and antenna gain