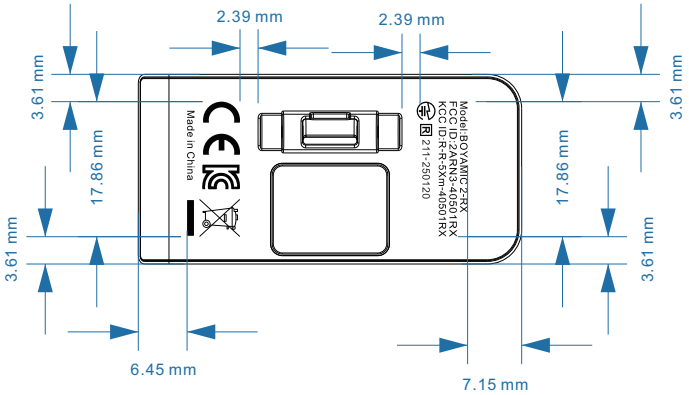
Model:BOYAMIC2-RX
FCC ID:2ARN3-40501RX
KCC ID:R-R-SXm-40501RX
申 国 211-250120
Made in China
2.39 mm
2.39 mm
3.61 mm
3.61 mm
17.86 mm
17.86 mm
3.61 mm
3.61 mm
6.45 mm
7.15 mm

打标内容

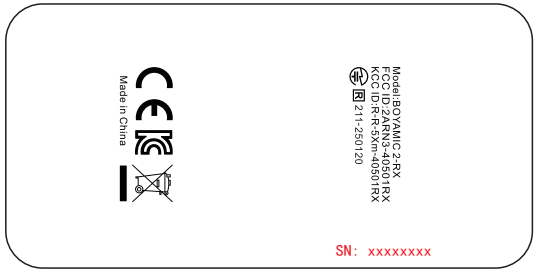
Model:BOYAMIC2-RX
FCC ID:2ARN3-40501RX
KCC ID:R-R-SXm-40501RX
申 国 211-250120
Made in China
SN: xxxxxxxx

BOYA