对讲机原理图

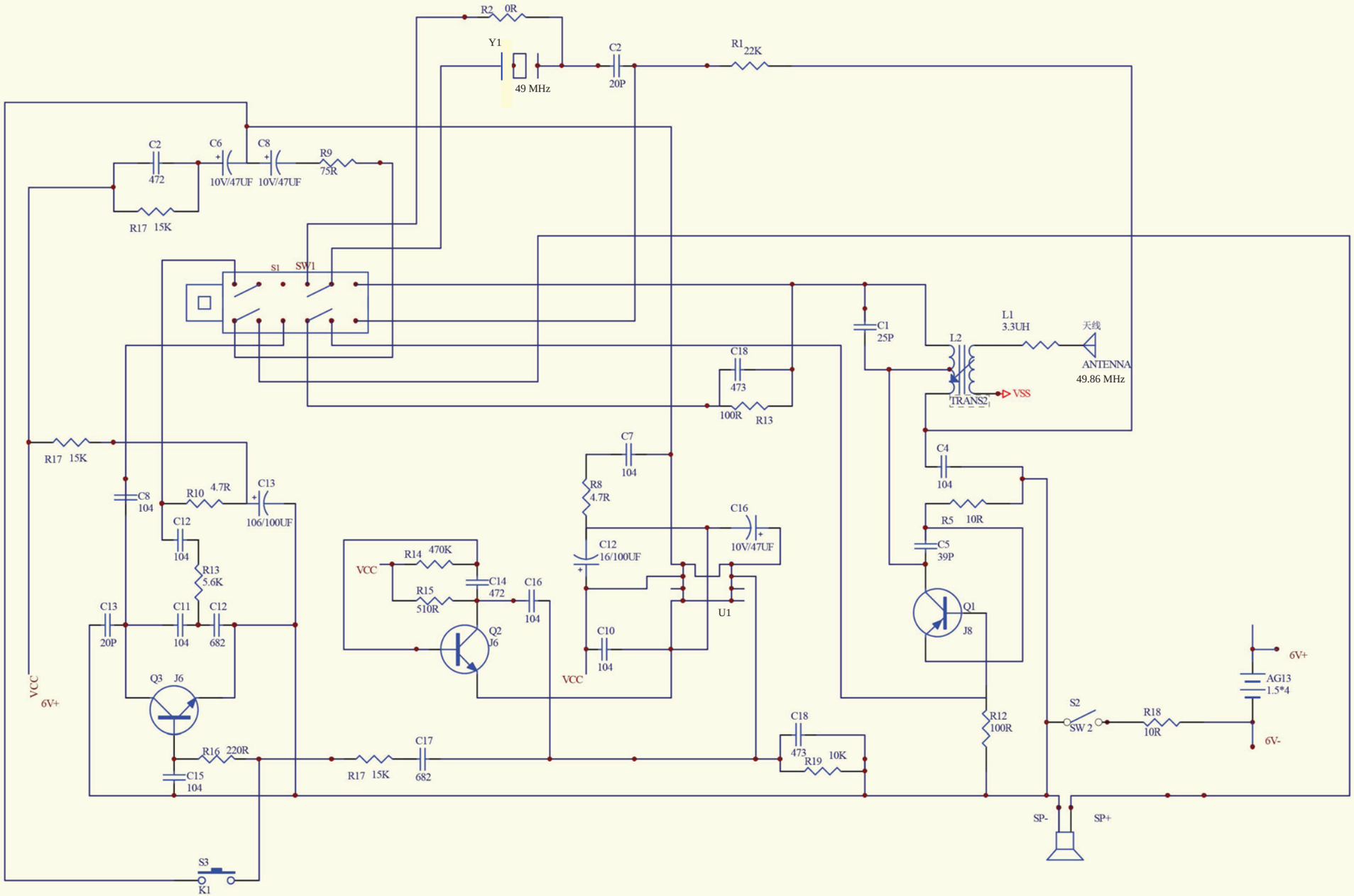

Title		
Size B	Number	Revision
Date: 2-Nov-2018		Sheet of
File: C:\Users\Administrator\Desktop\对讲机原理图.Ddb		Drawn By: