REVISIONS				
REV.	ECR	DESCRIPTION	DATE	BY
A		INITIAL RELEASE	1/29/2019	TRP
B		REDUCE SNAP THICKNESS	4/1/2019	TRP
C		UPDATE MATERIAL	4/13/2019	TRP
1	1180	UPDATED TO REV1 RELEASE	5/3/2019	RWS
2	1308	PAD PRINTING TEXT ADDED	9/12/2019	RWS

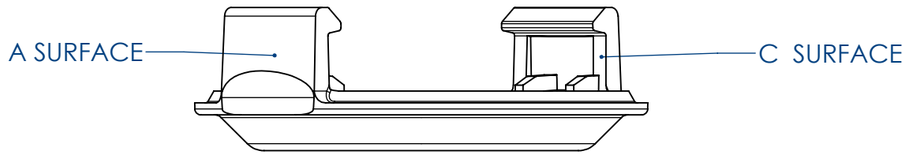

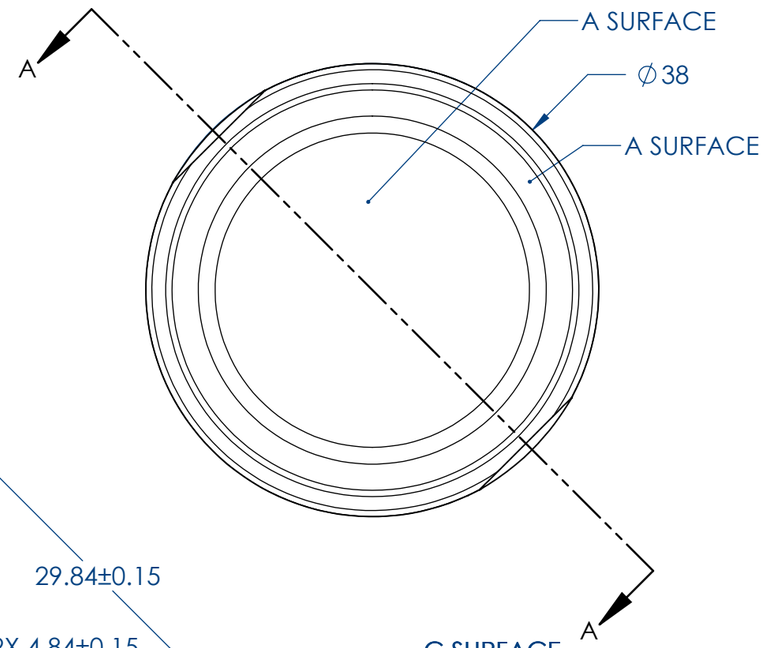

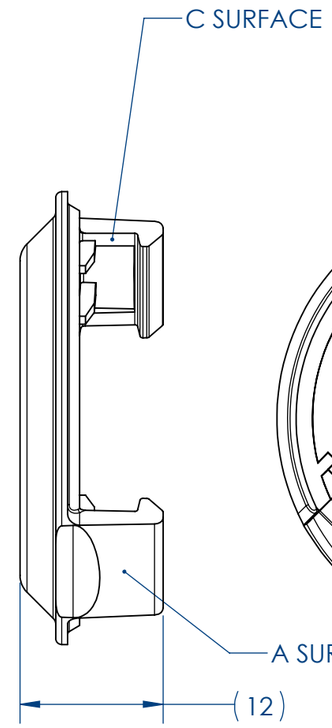

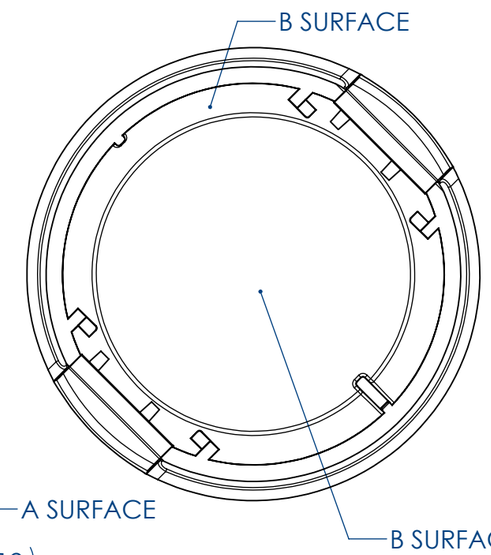

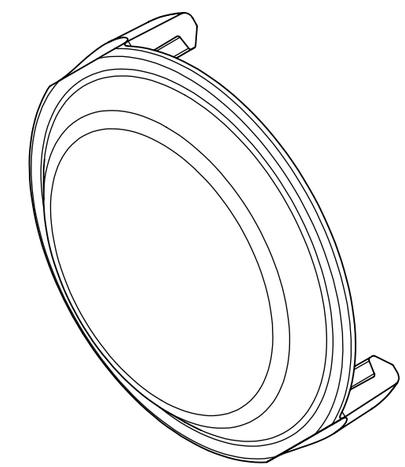

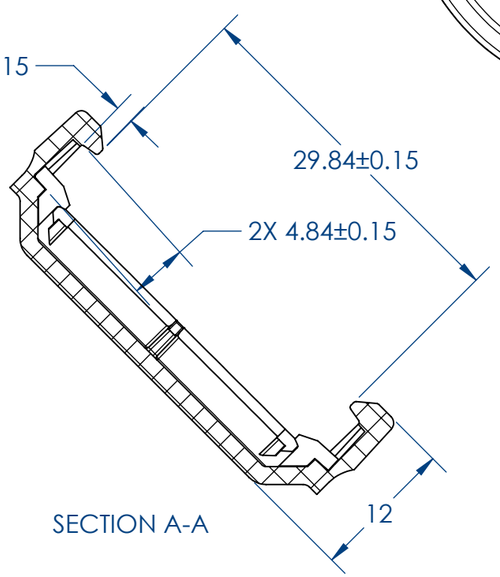

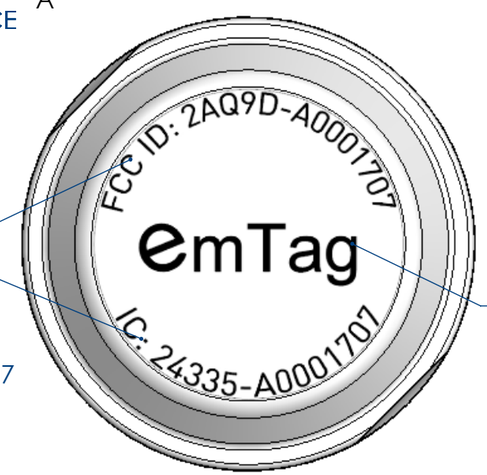

2 FONT TO BE DINOT, 4pt

2 FONT TO BE DINOT, 8pt

2 PAD PRINTED TEXT:
FCC ID: 2AQ9D-A0001707
EmTag
IC ID: 24335-A0001707

CLASS "A" SURFACES:
COSMETIC AND EASILY SEEN BY THE CUSTOMER. BLEMISHES, SPLAY, FLOW MARKS, ETC ARE NOT ACCEPTABLE. SINK MARKS NOT ACCEPTABLE IF VISIBLE AT ARMS LENGTH. FLASH LESS THAN 0.2MM IN HEIGHT AND MUST NOT BE SHARP TO THE TOUCH. MAXIMUM 20% REGRIND IN V-0 PARTS.

CLASS "B" SURFACES:
VISIBLE BUT NOT COSMETIC. MILL MARKS AND SCRATCHES REMOVED BY BEAD BLAST OR SANDING FOR CONSISTENT FINISH. MINOR BLUSH, SINKS, KNIT LINES TO BE AVOIDED BUT ACCEPTABLE ON PER CASE BASIS.

CLASS "C" SURFACES:
NOT TYPICALLY VISIBLE. MINOR MILL MARKS, BLUSH, KNIT LINES, SINK MARKS, AND FLASH ARE ACCEPTABLE.

PLASTICS	
MATERIAL	LG AF312A-OC850 WT ABS 94V-0
SPECIFICATION	
MANUFACTURER	
RATING	94V-0
COLOR	

C

THIS DOCUMENT IS UNCONTROLLED WHEN PRINTED

DIMENSIONS IN MM
UNLESS OTHERWISE NOTED. ALL INCH DIMENSIONS ARE IN [BRACKETS] AND REFERENCE. SEE MODEL FOR ANY FEATURES NOT DIMENSIONED.

ALL EDGES MUST BE FREE OF BURRS. BREAK ALL EDGES TO .13 - .40 UNLESS OTHERWISE NOTED. ALL THREADS TO BE FREE OF POWDER COAT. ALL SURFACES MUST BE FREE OF GREASE/OIL.
ALL CIRCLED AND GD&T DIMENSIONS ARE CRITICAL INSPECTION DIMENSIONS

PROPRIETARY AND CONFIDENTIAL: THIS DRAWING WAS DEVELOPED FROM CONFIDENTIAL INFORMATION AND MAY NOT BE DUPLICATED OR THE INFORMATION DISCLOSED WITHOUT WRITTEN AUTHORIZATION FROM ENOVATE MEDICAL

☐ CRITICAL COMPONENT ☒ RoHS

MODEL NAME: P0001698
CONFIGURATION: Default

3RD ANGLE PROJECTION

PART NUMBER: **P0001698** DWG REV: **2**

DESCRIPTION: **HOUSING, EMTAG LARGE BOTTOM**

SHEET SIZE	SHEET SCALE	SHEET	DRAFTSMAN	CHECKER	ENGINEER	DATE
B	2:1	1 of 1	TRP	RWS	TRP	1/29/2019

enovate MEDICAL
www.enovatemedical.com