Internal photo

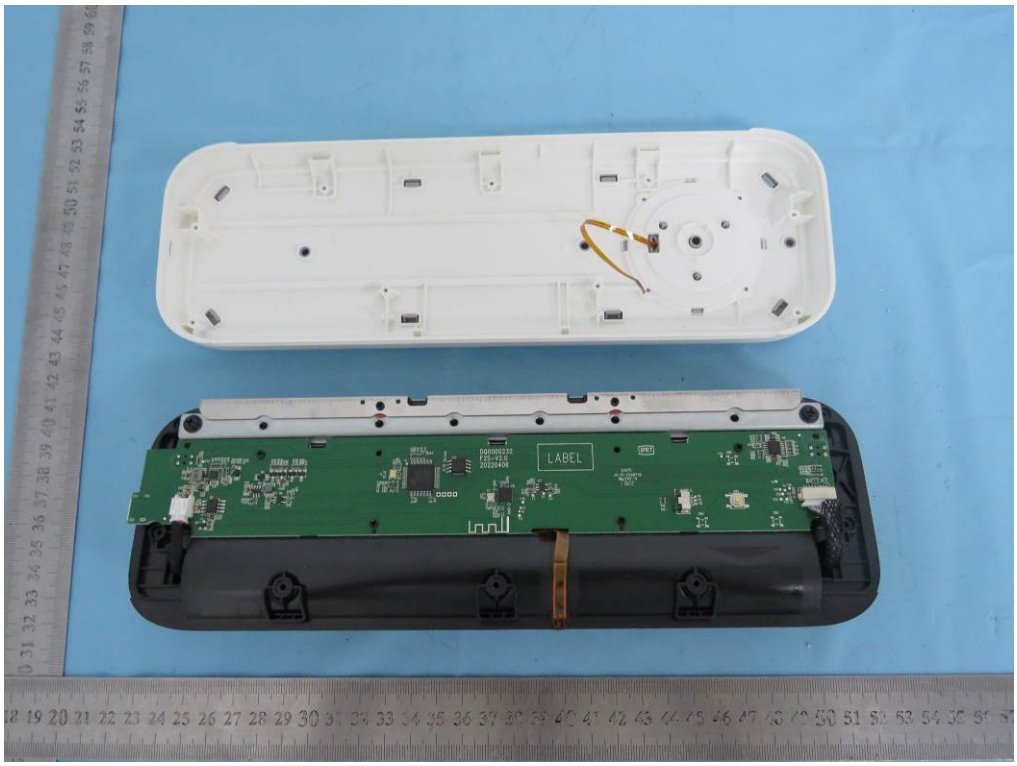
LABEL

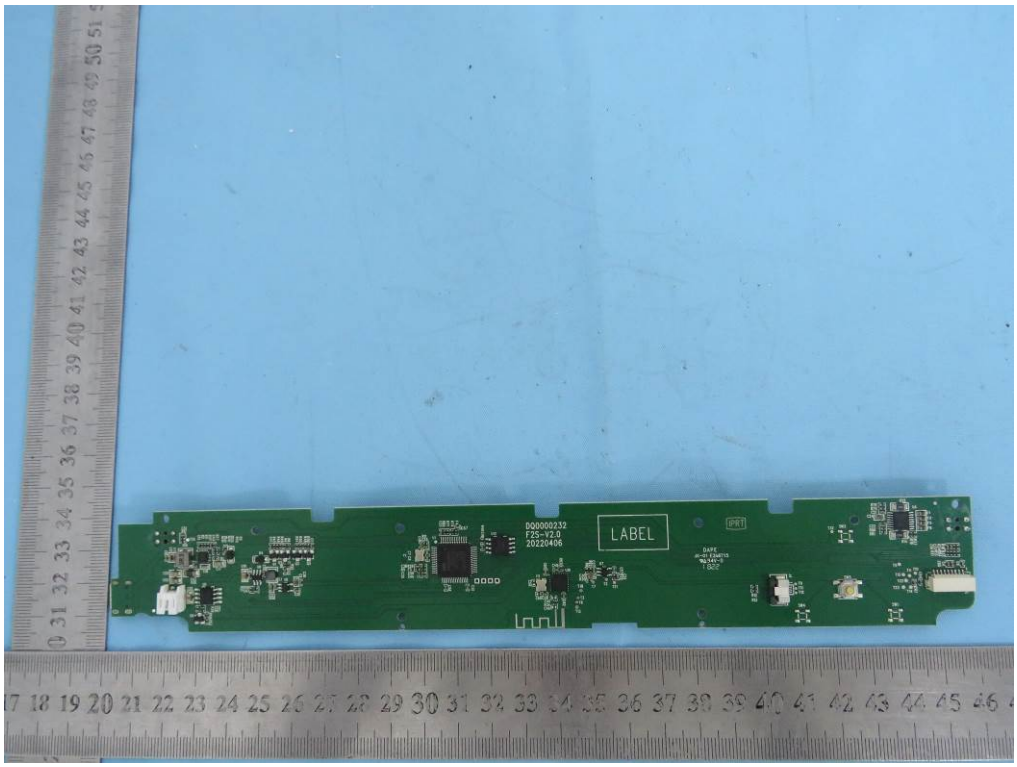
LABEL

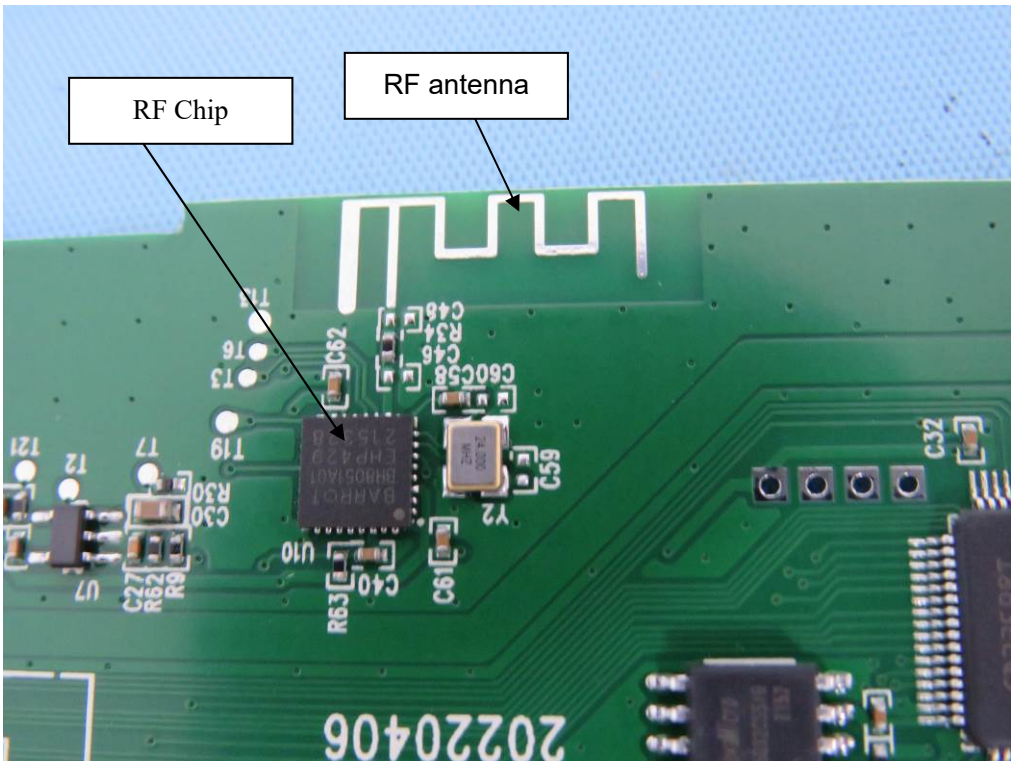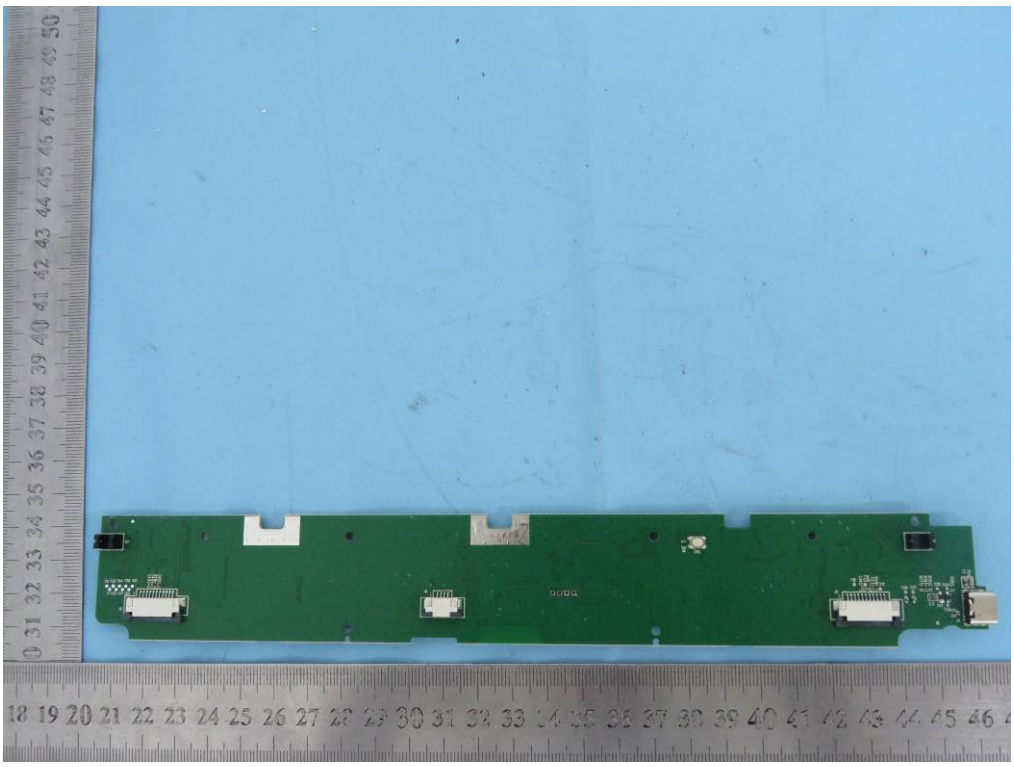
RF Chip
RF antenna