Radiated Emission Test Setup (Below 30 MHz)

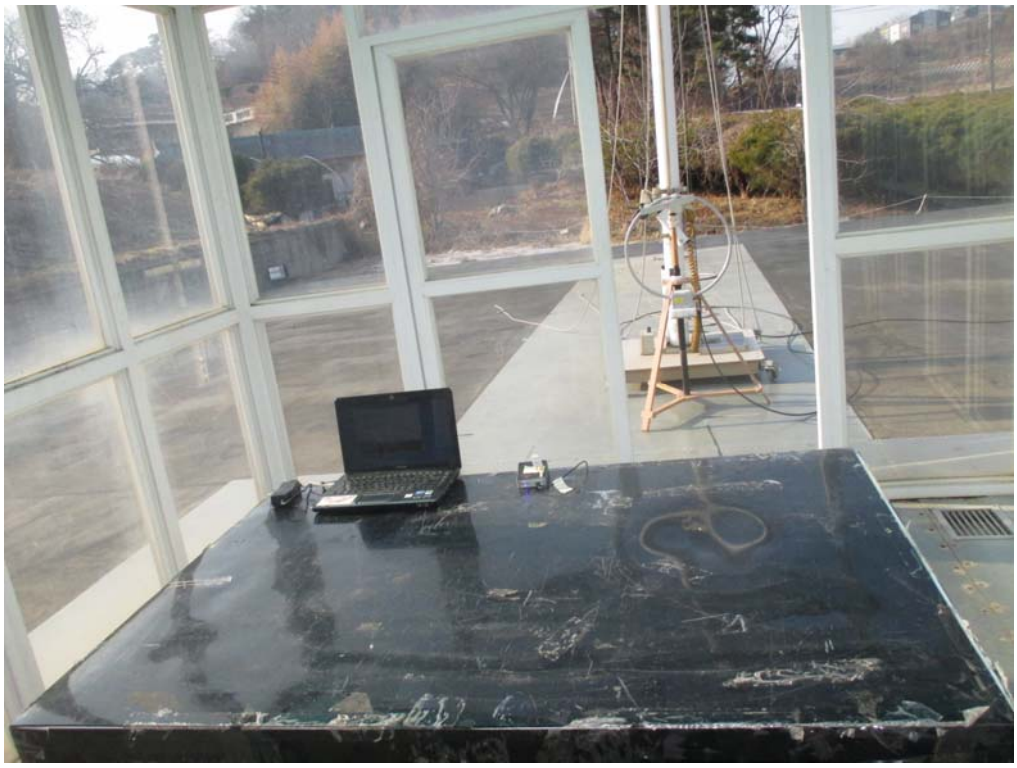

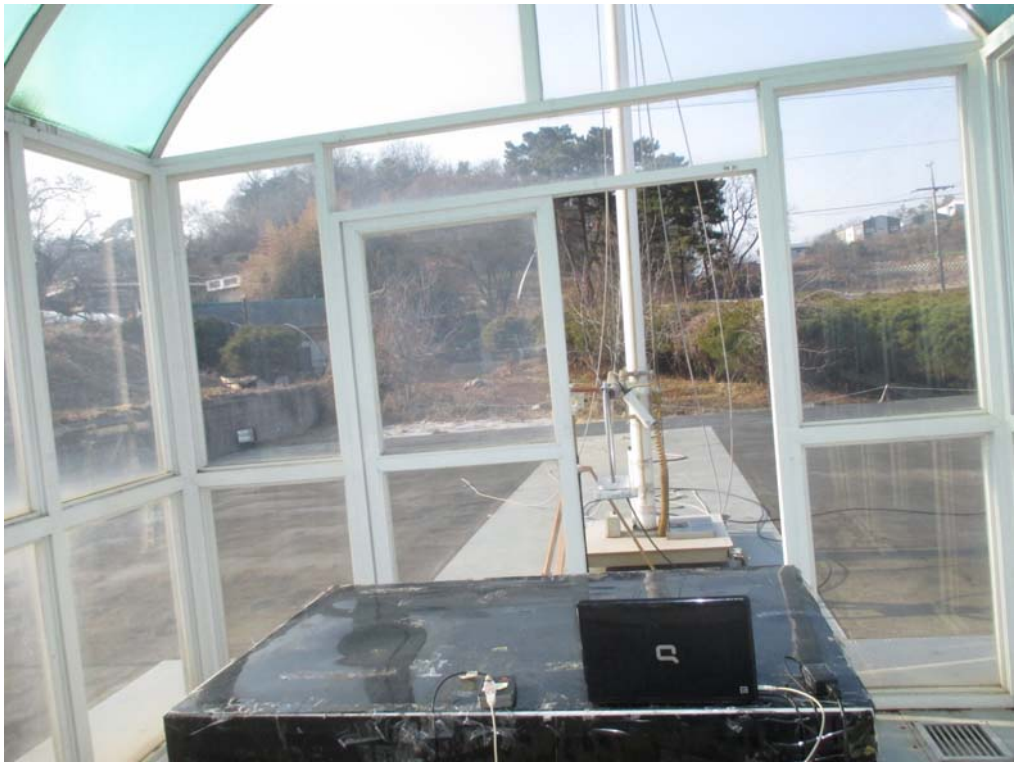

Head Office: #371-51, Gasan-dong, Geumcheon-gu, Seoul, 153-803, Korea Tel : 82-2-858-0786 Fax : 82-2-858-0788
Open site: #499-1, Sagot-ri, Seosin-myeon, Hwaseong-si, Gyeonggi-do, 445-882, Korea

Radiated Emission Test Setup (Below 1 GHz)

Head Office: #371-51, Gasan-dong, Geumcheon-gu, Seoul, 153-803, Korea Tel : 82-2-858-0786 Fax : 82-2-858-0788
Open site: #499-1, Sagot-ri, Seosin-myeon, Hwaseong-si, Gyeonggi-do, 445-882, Korea

Radiated Emission Test Setup (Above 1 GHz)

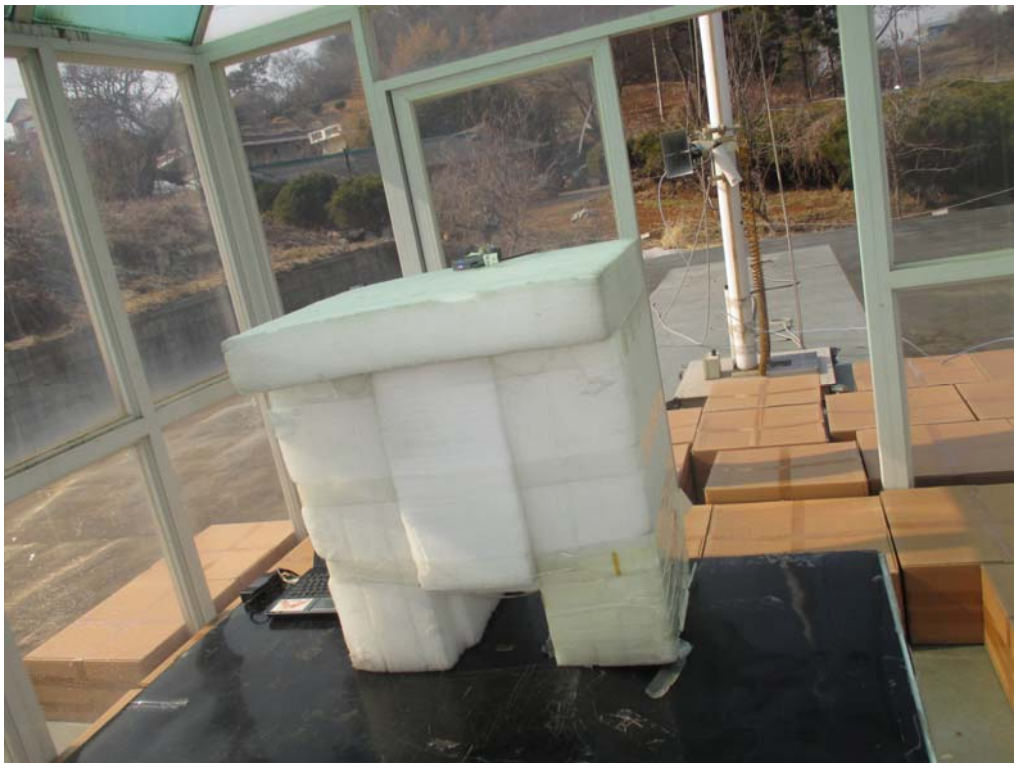

Head Office: #371-51, Gasan-dong, Geumcheon-gu, Seoul, 153-803, Korea Tel : 82-2-858-0786 Fax : 82-2-858-0788
Open site: #499-1, Sagot-ri, Seosin-myeon, Hwaseong-si, Gyeonggi-do, 445-882, Korea

Conducted Emission Test Setup

Head Office: #371-51, Gasan-dong, Geumcheon-gu, Seoul, 153-803, Korea Tel : 82-2-858-0786 Fax : 82-2-858-0788
Open site: #499-1, Sagot-ri, Seosin-myeon, Hwaseong-si, Gyeonggi-do, 445-882, Korea

The setup drawing(s)

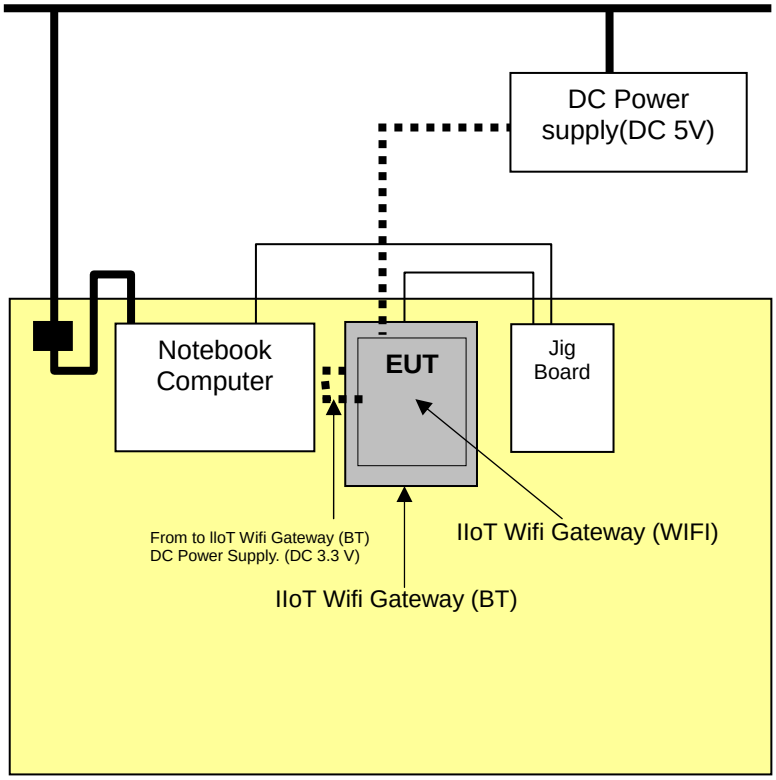

: Signal Line

: Power Line

: Adapter

: DC Line

The tested connected with Bluetooth and Wi-Fi portion of the EUT. And the device not is operated without BLE and WiFi. Because it supplies dc 3.3V power to WiFi from BLE equipment.

Head Office: #371-51, Gasan-dong, Geumcheon-gu, Seoul, 153-803, Korea Tel : 82-2-858-0786 Fax : 82-2-858-0788
Open site: #499-1, Sagot-ri, Seosin-myeon, Hwaseong-si, Gyeonggi-do, 445-882, Korea