ENGINEER	C.FENTON
DATE	8/20/24
VERSION	2

ENGINEER	C.FENTON
DATE	8/20/24
VERSION	2

<<<FLUTE DIRECTION>>>

OUTER BOX

350 GSM CCNB + #175 E FLUTE
4 COLOR PRINT
WATER VARNISH

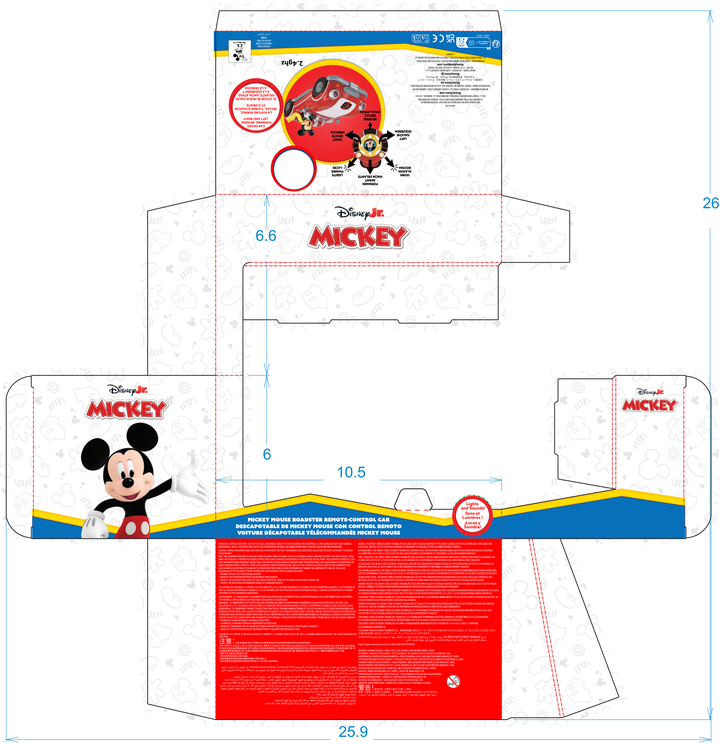

INSERT

350 GSM CCNB + #175 E FLUTE
4 COLOR PRINT
WATER VARNISH

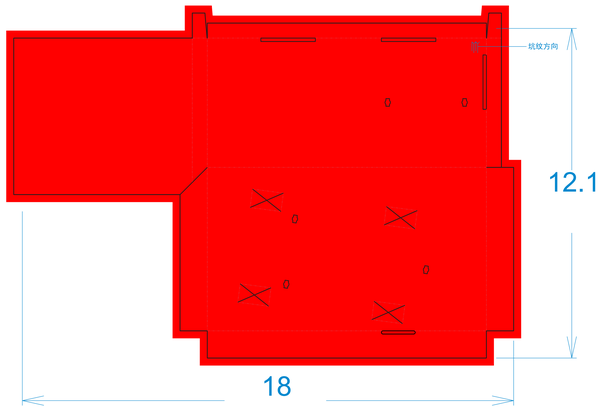

INSERT
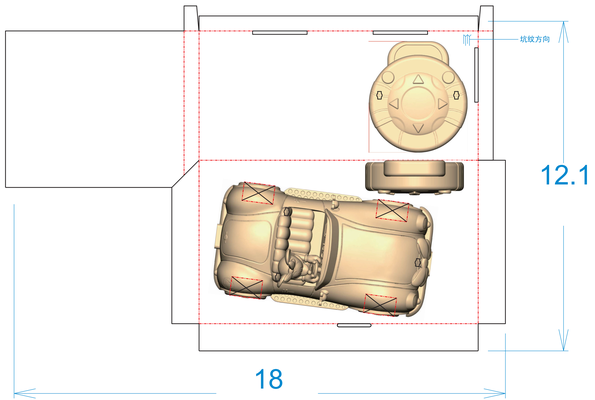
350 GSM CCNB + #175 E FLUTE
4 COLOR PRINT
WATER VARNISH